Product data sheet
Characteristics

XCKN2518G11
Limit switch, Limit switches XC Standard, XCKN, thermoplastic roller lever, 1NC+1 NO, slow, Pg11



Main

Range of product	Telemecanique Limit switches XC Standard
Series name	Standard format
Product or component type	Limit switch
Device short name	XCKN
Sensor design	Compact form A
Body type	Fixed
Head type	Rotary head
Material	Plastic
Body material	Plastic
Head material	Plastic
Fixing mode	By the body
Movement of operating head	Rotary
Type of operator	Spring return roller lever thermoplastic
Type of approach	Lateral approach, 2 directions
Cable entry	1 entry tapped for Pg 11 cable gland
Number of poles	2
Contacts type and composition	1 NC + 1 NO
Contact operation	Slow-break, break before make

Complementary

Tracks	24/40 mm
Switch actuation	By 30° cam
Electrical connection	Screw-clamp terminals, clamping capacity: 1 x 0.5...2 x 2.5 mm²
Contacts insulation form	Zb
Positive opening	With
Positive opening minimum torque	1.33 lbf.in (0.15 N.m)
Minimum torque for tripping	0.89 lbf.in (0.1 N.m)
Maximum actuation speed	4.92 ft/s (1.5 m/s)
Contact code designation	A300, AC-15 (Ue = 240 V), Ie = 3 A 10 A EN/IEC 60947-5-1 appendix A R300, DC-13 (Ue = 250 V), Ie = 0.1 A EN/IEC 60947-5-1 appendix A
[Ui] rated insulation voltage	300 VUL 508 500 V 3)IEC 60947-1 300 VCSA C22.2 No 14
[Uimp] rated impulse withstand voltage	6 KV IEC 60664 IEC 60947-1 6 kV
Short-circuit protection	10 A cartridge fuse gG
Electrical durability	5000000 Cycles, DC-13, 120 V, 4 W 60 cyc/mn 0.5 IEC 60947-5-1 appendix C 5000000 Cycles, DC-13, 24 V, 10 W 60 cyc/mn 0.5 IEC 60947-5-1 appendix C 5000000 cycles, DC-13, 48 V, 7 W 60 cyc/mn 0.5 IEC 60947-5-1 appendix C
Mechanical durability	10000000 cycles
Width	1.18 in (30 mm)
Height	4.25 in (108 mm)
Maximum Depth	1.75 in (44.5 mm)

The information provided in this documentation contains general descriptions and/or technical characteristics of the performance of the products contained herein.
This documentation is not intended as a substitute for and is not to be used for determining suitability or reliability of these products for specific user applications.
It is the duty of any such user or integrator to perform the appropriate and complete risk analysis, evaluation and testing of the products with respect to the relevant specific application or use thereof.
Neither Schneider Electric Industries SAS nor any of its affiliates or subsidiaries shall be responsible or liable for misuse of the information contained herein.

Net Weight	0.39 lb(US) (0.175 kg)
Terminals description ISO n°1	(21-22)NC (13-14)NO

Environment

Shock resistance	45 gn 11 ms IEC 60068-2-27
Vibration resistance	25 gn 10…500 Hz)IEC 60068-2-6
IP degree of protection	IP65 conforming to IEC 60529
IK degree of protection	IK04 EN 50102
Overvoltage category	Class II IEC 61140 Class II conforming to NF C 20-030
Ambient air temperature for operation	-13…158 °F (-25…70 °C)
Ambient air temperature for storage	-40…158 °F (-40…70 °C)
Protective treatment	TC
Product certifications	CCC UL CSA
Standards	UL 508 IEC 60204-1 EN 60204-1 EN 60947-5-1 IEC 60947-5-1 CSA C22.2 No 14

Ordering and shipping details

Category	22435 - LIMIT SWITCHES,TYPE XCM
Discount Schedule	T
GTIN	03389110546590
Nbr. of units in pkg.	20
Package weight(Lbs)	20 lb(US) (9.07 kg)
Returnability	No
Country of origin	ID

Packing Units

Unit Type of Package 1	PCE
Package 1 Height	1.18 in (3 cm)
Package 1 width	1.18 in (3 cm)
Package 1 Length	4.41 in (11.2 cm)
Unit Type of Package 2	BB1
Number of Units in Package 2	20
Package 2 Weight	3.84 lb(US) (1.74 kg)
Package 2 Height	4.33 in (11 cm)
Package 2 width	6.30 in (16 cm)
Package 2 Length	12.01 in (30.5 cm)
Unit Type of Package 3	S03
Number of Units in Package 3	60
Package 3 Weight	12.86 lb(US) (5.833 kg)
Package 3 Height	11.81 in (30 cm)
Package 3 width	11.81 in (30 cm)
Package 3 Length	15.75 in (40 cm)

Offer Sustainability

Sustainable offer status	Green Premium product
California proposition 65	WARNING: This product can expose you to chemicals including: Diisononyl phthalate (DINP), which is known to the State of California to cause cancer, and Di-isodecyl phthalate (DIDP), which is known to the State of California to cause birth defects or other reproductive harm. For more information go to www.P65Warnings.ca.gov
REACh Regulation	REACh Declaration
EU RoHS Directive	Pro-active compliance (Product out of EU RoHS legal scope) EU RoHS Declaration
Mercury free	Yes
RoHS exemption information	Yes
Environmental Disclosure	Product Environmental Profile

Contractual warranty

Warranty	18 months

Dimensions

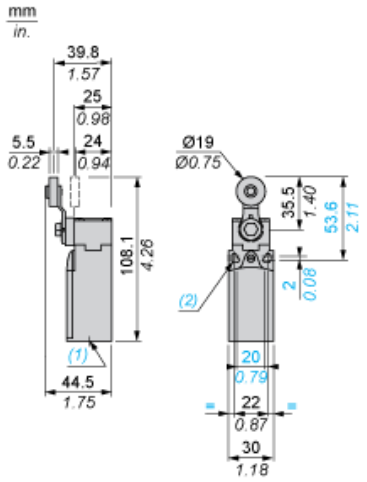

(1) 1 tapped entry for Pg 11 cable gland
(2) Ø: 2 elongated holes Ø 4.3 x 6.3 on 22 mm centres, 2 holes Ø 4.3 on 20 mm centres.

Mounting with Cable Entry

Position of Cable Gland

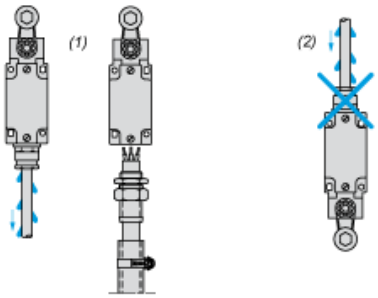

(1) Recommended
(2) To be avoided

Mounting with Rotary Heads and Levers

Type of Cam

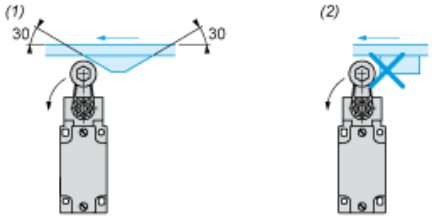

(1) Recommended
(2) To be avoided

Wiring Diagram

2-pole N/C + N/O Break before Make, Slow Break

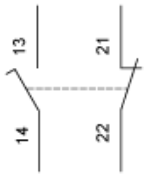

Characteristics of Actuation

Switch Actuation by 30° Cam

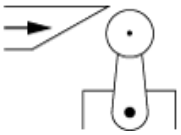

Functionnal Diagram

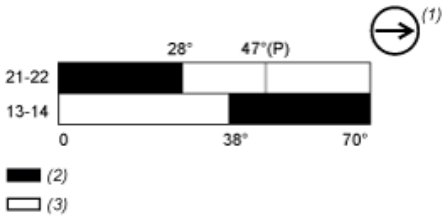

(P) Positive opening point
(1) NC contact with positive opening operation
(2) Closed
(3) Open