Product data sheet
Characteristics

XCKVR44D2H29
Limit switch, Limit switches XC Standard, XCKVR, reverse head stay put crossed rods, 2x(NC+NO), slow, M20



Main

Range of product	OsiSense XC
Series name	Special format
Product or component type	Limit switch
Product specific application	For hoisting and mechanical handling applications
Device short name	XCKVR
Body type	Fixed
Head type	Reversed rotary head
Material	Plastic
Body material	(PBT+PC)-GF30 FR
Head material	(PBT+PC)-GF30 FR
Fixing mode	By the body
Movement of operating head	Rotary
Type of operator	Stay put crossed rods lever metal square rod 6 mm, L = 200 mm
Type of approach	Lateral approach, 2 directions
Cable entry	1 entry tapped and 2 breakout holes for M20 x 1.5 cable gland 0.28…0.51 in (7…13 mm)
Number of poles	4
Contacts type and composition	2 x (1 NC + 1 NO)
Contact operation	Slow-break, break before make

Complementary

Switch actuation	By any moving part
Electrical connection	Screw-clamp terminals, clamping capacity: 1 x 0.5...2 x 2.5 mm²
Contacts insulation form	Zb
Number of steps	4 electrical positions
Contact block per direction [control circuit]	2 per direction
Positive opening	Without
Minimum torque for tripping	4.43 lbf.in (0.5 N.m)
Minimum actuation speed	6 m/min
Maximum actuation speed	4.92 ft/s (1.5 m/s) actuation point on the rod between 65 and 95 mm
Maximum displacement angle	-180 ° 180 °
Contact code designation	A300, AC-15 (Ue = 240 V), Ie = 3 A 10 A EN/IEC 60947-5-1 appendix A Q150, DC-13 (Ue = 125 V), Ie = 0.55 A EN/IEC 60947-5-1 appendix A
[Ui] rated insulation voltage	300 VUL 508 300 VCSA C22.2 No 14 500 V 3)EN/IEC 60947-1
Maximum resistance across terminals	25 MOhm IEC 60255-7 category 3
[Uimp] rated impulse withstand voltage	6 KV IEC 60664 6 kV EN/IEC 60947-1
Short-circuit protection	10 A cartridge fuse, type gG
Mechanical durability	1000000 cycles
Width	7.87 in (200 mm)
Height	7.87 in (200 mm)

The information provided in this documentation contains general descriptions and/or technical characteristics of the performance of the products contained herein.
This documentation is not intended as a substitute for and is not to be used for determining suitability or reliability of these products for specific user applications.
It is the duty of any such user or integrator to perform the appropriate and complete risk analysis, evaluation and testing of the products with respect to the relevant specific application or use thereof.
Neither Schneider Electric Industries SAS nor any of its affiliates or subsidiaries shall be responsible or liable for misuse of the information contained herein.

Maximum Depth	2.60 in (66 mm)
Net Weight	0.71 lb(US) (0.32 kg)
Terminals description ISO n°1	(13-14)NO (21-22)NC

Environment

Shock resistance	50 gn EN/IEC 60068-2-27
Vibration resistance	25 gn 10…500 Hz)EN/IEC 60068-2-6
IP degree of protection	IP65 conforming to EN/IEC 60529
IK degree of protection	IK04 EN 50102
Electrical shock protection class	Class II IEC 60536
Ambient air temperature for operation	-13…158 °F (-25…70 °C)
Ambient air temperature for storage	-40…158 °F (-40…70 °C)
Protective treatment	TC
Product certifications	CCC CSA UL CE
Standards	CSA C22.2 No 14 EN/IEC 60947-5-1 UL 508

Ordering and shipping details

Category	22449 - LIMIT SWITCHES,ACCESSORIES
Discount Schedule	T
GTIN	03389119077484
Nbr. of units in pkg.	1
Package weight(Lbs)	1 lb(US) (0.45 kg)
Returnability	No
Country of origin	ID

Packing Units

Unit Type of Package 1	PCE
Package 1 Height	3.54 in (9 cm)
Package 1 width	3.03 in (7.7 cm)
Package 1 Length	7.68 in (19.5 cm)

Offer Sustainability

California proposition 65	WARNING: This product can expose you to chemicals including: Diisononyl phthalate (DINP), which is known to the State of California to cause cancer, and Di-isodecyl phthalate (DIDP), which is known to the State of California to cause birth defects or other reproductive harm. For more information go to www.P65Warnings.ca.gov
REACh Regulation	REACh Declaration
EU RoHS Directive	Pro-active compliance (Product out of EU RoHS legal scope) EU RoHS Declaration
Mercury free	Yes
RoHS exemption information	Yes

Contractual warranty

Warranty	18 months

Dimensions

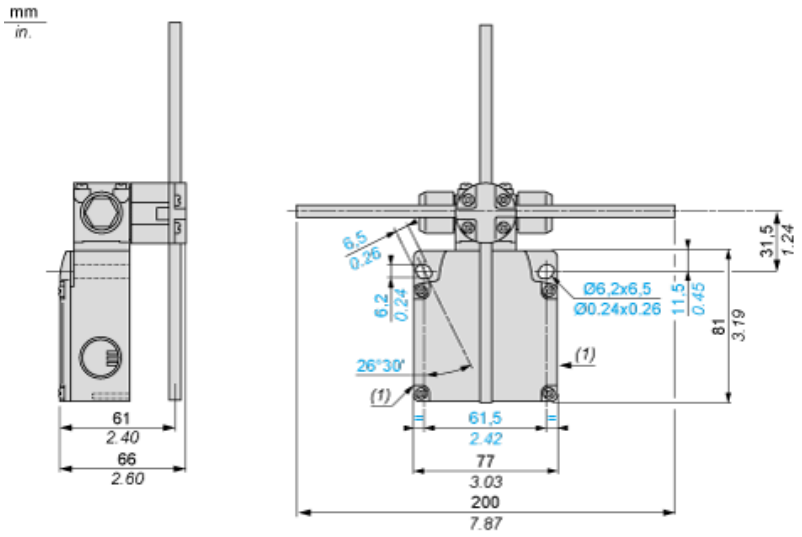

(1) 2 knock-out holes for ISO M20 cable gland (reference: DE9 PEM20010).

Wiring Diagram

2 x 2-pole NC+NO Break Before Make, Slow Break

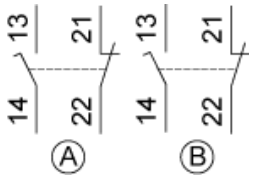

Functionnal Diagram

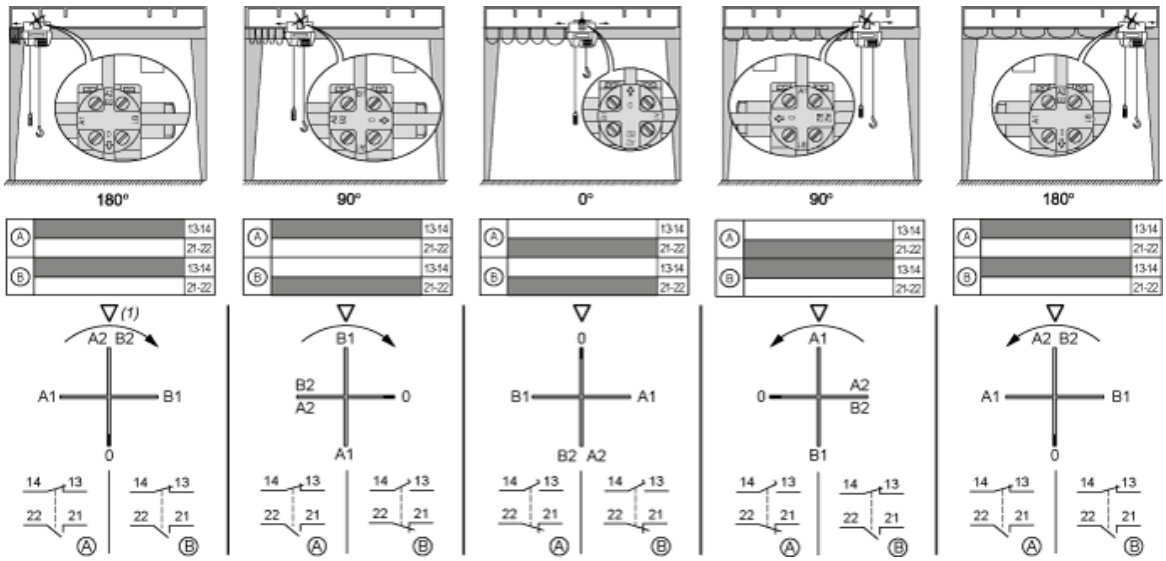

(1) Triangle symbol marked on top of head.