# EZLED78SFYB44



This 78W spotlight combines high lumen output and a concentrated narrow beam distribution to illuminate objects up to 80 feet away with brilliant precision. Ideal for lighting large flags, tall building façades and signage.

Color: Bronze

Weight: 25.5 lbs

| | |
|---|---|
| **Project:** | **Type:** |
| **Prepared By:** | **Date:** |

### Driver Info

| | |
|---|---|
| Type | Constant Current |
| 120V | 0.82A |
| 208V | 0.53A |
| 240V | 0.46A |
| 277V | 0.40A |
| Input Watts | 90.6W |

### LED Info

| | |
|---|---|
| Watts | 78W |
| Color Temp | 3000K (Warm) |
| Color Accuracy | 80 CRI |
| L70 Lifespan | 100,000 Hours |
| Lumens | 8,602 lm |
| Efficacy | 94.9 lm/W |

## Technical Specifications

### Compliance

**UL Listed:**
Suitable for wet locations. Suitable for ground mounting.

**IESNA LM-79 & LM-80 Testing:**
RAB LED luminaires and LED components have been tested by an independent laboratory in accordance with IESNA LM-79 and LM-80.

### Construction

**Effective Projected Area:**
EPA = 1.2

**Cold Weather Starting:**
The minimum starting temperature is -40°C (-40°F)

**Maximum Ambient Temperature:**
Suitable for use in up to 40°C (104°F)

**Thermal Management:**
Superior thermal management with external "Air-Flow" fins

**Housing:**
Precision die-cast aluminum housing and door frame

**Mounting:**
2 3/8" slipfitter mount with stainless steel hardware

**Lens:**
Tempered glass

**Reflector:**
Vacuum-metalized, specular thermoplastic

**Gaskets:**
High-temperature silicone

**Finish:**
Formulated for high durability and long-lasting color

**Green Technology:**
Mercury and UV free. RoHS-compliant components.

**Tilt Increment:**
Rotates in 6 degree increments

### Other

**Note:**
All values are typical (tolerance +/- 10%)

**Warranty:**
RAB warrants that our LED products will be free from defects in materials and workmanship for a period of five (5) years from the date of delivery to the end user, including coverage of light output, color stability, driver performance and fixture finish. RAB's warranty is subject to all terms and conditions found at rablighting.com/warranty.

**Patents:**
The design of EZLED is protected by patents in U.S. Pat D679,856, and pending patents in Canada, China, Taiwan and Mexico.

**Buy American Act Compliance:**
RAB values USA manufacturing! Upon request, RAB may be able to manufacture this product to be compliant with the Buy American Act (BAA). Please contact customer service to request a quote for the product to be made BAA compliant.

### LED Characteristics

**LEDs:**
Three multi-chip, high-output, long-life LEDs

**Color Consistency:**
3-step MacAdam Ellipse binning to achieve consistent fixture-to-fixture color

**Color Stability:**
LED color temperature is warrantied to shift no more than 200K in color temperature over a 5-year period

**Color Uniformity:**
RAB's range of Correlated Color Temperature follows the guidelines of the American National Standard for Specifications for the Chromaticity of Solid State Lighting (SSL) Products, ANSI C78.377-2017.


Copyright © 2024 RAB Lighting All Rights Reserved Note: Specifications are subject to change at any time without notice

## Technical Specifications (continued)

### Performance

**Lifespan:**
100,000-Hour LED lifespan based on IES LM-80 results and TM-21 calculations

### Optical

**NEMA Type:**
NEMA Beam Spread of 4H x 4V

### Electrical

**Driver:**
3x26W drivers Constant current, Class2, 100-277V. 50/60 Hz, 6KV Surge Protection, 720mA, 100-277V 0.4A, Power Factor 99%.

**THD:**
8.0% at 120V, 11.4% at 277V

## Dimensions

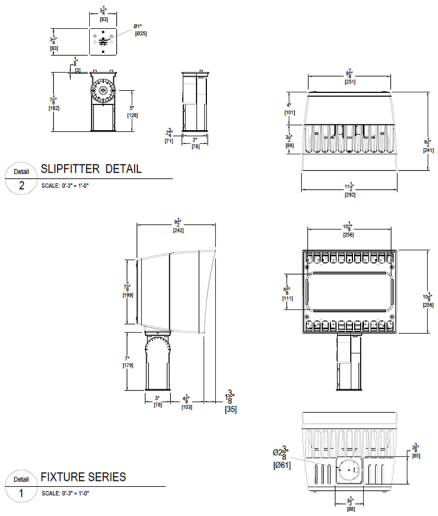


## Features

- High powered narrow beam spotlight
- Illuminates objects at a distance of 80 feet
- Available in NEMA type 3H x 3V and 4H x 4V
- Trunnion or slipfitter mounting options available
- Outperforms equivalent MH fixtures


Copyright © 2024 RAB Lighting All Rights Reserved Note: Specifications are subject to change at any time without notice

# EZLED78SFYB44

## Ordering Matrix

| Family | Wattage | Mounting | Color Temp | Distribution | Finish | Voltage | Dimming | Control Options |
|---|---|---|---|---|---|---|---|---|
| EZLED | 78 | SF | Y | B44 | | | | |
| | **78 =** 78W | **SF =** Slipfitter<br>**T =** Trunnion | **Blank =** 5000K Cool<br>**N =** 4000K Neutral<br>**Y =** 3000K Warm | **Blank =** NEMA 3H x 3V<br>**B44 =** NEMA 4H x 4V | **Blank =** Bronze<br>**W =** White | **Blank =** 120-277V | **Blank =** None (Standard)<br>**/D10 =** 0-10V Dimming<br>**/BL =** Bi-Level | **Blank =** No Option<br>**/PC =** 120V Button Photocell<br>**/PC2 =** 277V Button Photocell<br>**/PCS =** 120V Swivel Photocell<br>**/PCS2 =** 277V Swivel Photocell<br>**/PCT =** 120-277V Twistlock Photocell |


Copyright © 2024 RAB Lighting All Rights Reserved Note: Specifications are subject to change at any time without notice