YBLED40/ARM/PCU



High output LED yardblaster delivers enough light to hit the broad side of a barn. Durable finish withstands harsh environments.

Color: Silver gray

Weight: 12.8 lbs

Project:	Type:
Prepared By:	**Date:**

Driver Info

Type	Constant Current
120V	0.4A
208V	0.217A
240V	0.188A
277V	0.17A
Input Watts	41.90W
Efficiency	95%

LED Info

Watts	40.00W
Color Temp	5000K (Cool)
Color Accuracy	70 CRI
L70 Lifespan	100,000
Lumens	5,539
Efficacy	132.2 LPW

Technical Specifications

Listings

UL Listed:

Suitable for dry and wet locations

IESNA LM-79 & IESNA LM-80 Testing:

RAB LED luminaires and LED components have been tested by an independent laboratory in accordance with IESNA LM-79 and LM-80.

DLC Listed:

This product is listed by Design Lights Consortium (DLC) as an ultra-efficient premium product that qualifies for the highest tier of rebates from DLC Member Utilities.DLC Product Code: PDCEWIL1

Electrical

Driver:

Constant Current, Class 2, 120V-277V, 50/60 Hz, 1100mA, 120V: 0.4A, 208V: 0.217A, 240V: 0.188A, 277V: 0.17A

THD:

6% at 120V, 8.6% at 277V

Power Factor:

99.7% at 120V, 88.9% at 277V

Surge Protection:

4 kV Line-Line, 6 kV Line-Earth

Photocell:

120-277V Button Photocell Included. Photocell is compatible with 120V-277V.

LED Characteristics

LEDs:

Long-life, high-efficiency, surface-mount LEDs

Lifespan:

100,000-hour LED lifespan based on IES LM-80 results and TM-21 calculations

Color Stability:

LED color temperature is warrantied to shift no more than 200K in CCT over a 5-year period

Color Uniformity:

RAB's range of CCT (Correlated Color Temperature) follows the guidelines of the American National Standard for Specifications for the Chromaticity of Solid State Lighting (SSL) Products, ANSI C78.377-2017.

Construction

IP Rating:

Ingress Protection rating of IP66 for dust and water

IES Classification:

The Type V distribution produces light in a wide and uniform 360° pattern that is perfect for large outdoor areas such as parking lots, corporate parks and retail settings

Cold Weather Starting:

Minimum starting temperature is -40°C (-40°F)

Housing:

Precision die-cast aluminum housing and arm

Mounting:

Mounts on pole

Reflector:

High-reflectance white paint

Lens:

Flat polycarbonate lens

Copyright © 2019 RAB Lighting All Rights Reserved Note: Specifications are subject to change at any time without notice

Technical Specifications (continued)

Construction

Gaskets:

High-temperature silicone

Finish:

Formulated for high durability and long-lasting color

Green Technology:

Mercury and UV free. RoHS-compliant components.

Optical

BUG Rating:

B2 U3 G2

Other

Patents:

The design of YBLED26 is protected by patents pending in US, Canada, China, Taiwan and Mexico

Warranty:

RAB warrants that our LED products will be free from defects in materials and workmanship for a period of five (5) years from the date of delivery to the end user, including coverage of light output, color stability, driver performance and fixture finish. RAB's warranty is subject to all terms and conditions found at rablighting.com/warranty.

Equivalency:

Equivalent to 175 HPS

Buy American Act Compliance:

RAB values USA manufacturing! Upon request, RAB may be able to manufacture this product to be compliant with the Buy American Act (BAA). Please contact customer service to request a quote for the product to be made BAA compliant.

Dimensions

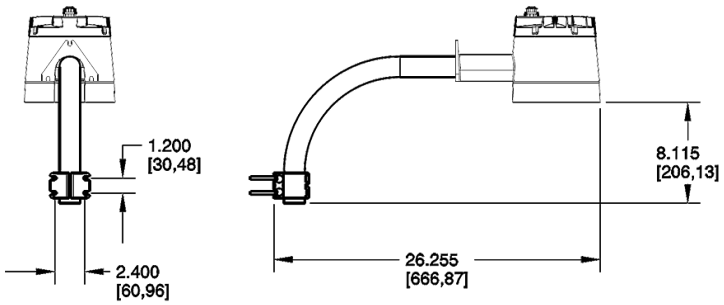

Features

- Widespread light distribution illuminates large areas
- Vandal-resistant
- High-impact polycarbonate lens
- Rugged die-cast aluminum housing withstands harsh environments
- Integrated dusk to dawn photocell
- 100,000-hour LED lifespan

Ordering Matrix

Family	Wattage	Color Temp	Mounting	Dimming	Options
YBLED	40		/ARM		/PCU
	26 = 26W **40 =** 40W **60 =** 60W	**Blank =** 5000K (Cool) **Y =** 3000K (Warm) **N =** 4000K (Neutral)	**Blank =** Wall **/ARM =** Arm	**Blank =** No Dimming [3] **/D10 =** 0-10V Dimming [1]	**/PCU =** Standard Button Photocell **Blank =** Button Photocell [2] **/PCT =** Twistlock Photocell **/5PR =** 5-Pin Receptacle **/LC =** Lightcloud® Controller

[1] Available only in 40W & 60W with /5PR or /LC
[2] Standard with 26W
[3] Available only in the Blank,/PCU or /PCT options

Copyright © 2019 RAB Lighting All Rights Reserved Note: Specifications are subject to change at any time without notice