EP124

Explosionproof fixture for ceiling mounting. Set screw to stern prevents rotation. Cast aluminum housing, heat and impact resistant globe. Fits all incandescent lamps up to 300 Watt PS-25. Lamp not supplied.

Color: Silver gray

Weight: 9.8 lbs

Project:	**Type:**
Prepared By:	**Date:**

Lamp Info

Type	PS-25
Watts	300W
Shape/Size	N/A
Base	N/A
ANSI	N/A
Hours	N/A
Lamp Lumens	N/A
Efficacy	N/A

Ballast Info

Type	N/A
120V	N/A
208V	N/A
240V	N/A
277V	N/A
Input Watts	N/A

Technical Specifications

Construction

Housings:
Heavy-cast aluminum. Unit withstands 1490 lbs. per square inch hydrostatic pressure.

Globe:
Impact and heat resistant clear prismatic design affords excellent light control

Finish:
Formulated for high durability and long-lasting color

Reflectors:
Heavy gauge aluminum with highly reflective white acrylic finish

Hub Size:
1/2"

Hub Count:
1

Mount:
Ceiling mount

Weight:
9.8 lb.

Electrical

THD:
7.5% at 120V, 7.1% at 277V

Wiring:
Wiring is factory sealed. Inspection hole provides easy access to splice compartment.

Socket:
Medium base glazed porcelain. Leads pass through sealing compound that separates lamp chamber from wiring compartment. Heavy gauge nickel plated copper components. Spring loaded center contact.

Other

Refer to the catalog for Class and Division specifications:

Buy American Act Compliance:
RAB values USA manufacturing! Upon request, RAB may be able to manufacture this product to be compliant with the Buy American Act (BAA). Please contact customer service to request a quote for the product to be made BAA compliant.

Copyright © 2023 RAB Lighting All Rights Reserved Note: Specifications are subject to change at any time without notice

EP124

Dimensions

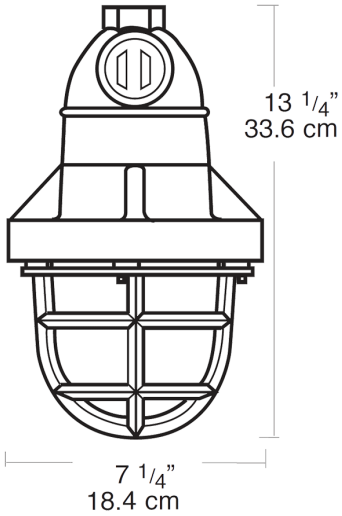

Features

- Fixture comes complete with built-in junction box
- Cast aluminum construction with gray polyester powder coat finish
- Easy relamping with a single thumb screw
- Factory sealed for easy installation
- Heat and impact resistant prismatic glass globe
- Die cast guard
- Easy field installation

Copyright © 2023 RAB Lighting All Rights Reserved Note: Specifications are subject to change at any time without notice