LFLED5NA



Compact 5 Watt LED floodlight perfectly suited for small-scale landscape lighting applications. 85% more energy efficient than its 35 Watt MR16 equivalent. Specialized microprismatic lens delivers even and consistent light. Utilizes line voltage (120V-240V).

Color: Bronze

Weight: 1.6 lbs

Project:	**Type:**
Prepared By:	**Date:**

Driver Info

Type	Constant Current
120V	0.1A
208V	0.06A
240V	0.05A
277V	N/A
Input Watts	5.1W

LED Info

Watts	5W
Color Temp	4000K (Neutral)
Color Accuracy	90 CRI
L70 Lifespan	100,000 Hours
Lumens	208 lm
Efficacy	40.8 lm/W

Technical Specifications

Compliance

UL Listed:
Suitable for wet locations. Suitable for ground mounting.

IESNA LM-79 & LM-80 Testing:
RAB LED luminaires and LED components have been tested by an independent laboratory in accordance with IESNA LM-79 and LM-80.

Performance

Lifespan:
100,000-Hour LED lifespan based on IES LM-80 results and TM-21 calculations

Optical

Spot Lens:
Optional spot lens enables a tool-less conversion to a NEMA Type 3H x 3V. Great for accent lighting or grazing buildings for an artistic touch. Spot reflector kit available here.

NEMA Type:
NEMA Beam Spread of 4H x 4V

LED Characteristics

LED:
5 Watt high output, long-life LED

Color Consistency:
3-step MacAdam Ellipse binning to achieve consistent fixture-to-fixture color

Color Stability:
LED color temperature is warrantied to shift no more than 200K in color temperature over a 5-year period

Color Temperature:
4000K

Color Uniformity:
RAB's range of Correlated Color Temperature follows the guidelines of the American National Standard for (SSL) Products, ANSI C78.377-2017.

Construction

Lens:
Microprismatic diffusion lens for smooth and even light distribution

Cold Weather Starting:
The minimum starting temperature is -40°C (-40°F)

Maximum Ambient Temperature:
Suitable for use in up to 40°C (104°F)

Housing:
Precision die-cast aluminum housing, hood and mounting arm

Gaskets:
High-temperature Silicone

Finish:
Formulated for high durability and long-lasting color

Green Technology:
Mercury and UV free. RoHS-compliant components.

Other

Warranty:
RAB warrants that our LED products will be free from defects in materials and workmanship for a period of five (5) years from the date of delivery to the end user, including coverage of light output, color stability, driver performance and fixture finish. RAB's warranty is subject to all terms and conditions found at rablighting.com/warranty.

Patents:
The design of the LFLED is protected by Taiwan Patent 01510966 and pending patents in US, Canada, China, and Mexico

Buy American Act Compliance:
RAB values USA manufacturing! Upon request, RAB may be able to manufacture this product to be compliant with the Buy American Act (BAA). Please contact customer service to request a quote for the product to be made BAA compliant.

Copyright © 2025 RAB Lighting All Rights Reserved Note: Specifications are subject to change at any time without notice

Technical Specifications (continued)

Electrical

Driver:

Constant Current, Class 2, 100-240V, 50-60Hz,
100-240VAC 0.18A.

Dimensions

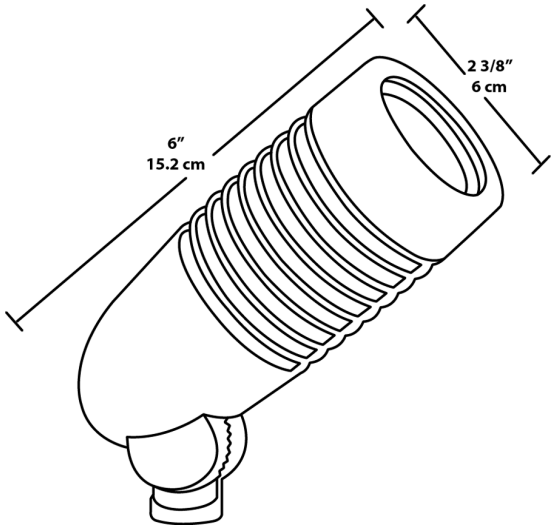

Features

- Microprismatic diffusion lens for even light distribution
- 4H x 4V NEMA type with 44° Beam Angle
- Optional spot hood reflector available
- 100,000-hour life based on LM-80 results and TM-21 calculations
- 5-Year, No-Compromise Warranty

Ordering Matrix

Family	Wattage	Color Temp	Finish
LFLED	5	N	A
	5 = 5W	**Blank =** 5000K Cool **Y =** 3000K Warm **N =** 4000K Neutral	**A =** Bronze **W =** White **B =** Black **VG =** Verde Green

Copyright © 2025 RAB Lighting All Rights Reserved Note: Specifications are subject to change at any time without notice