YBLED26/ARM/PCT



High output LED yardblaster delivers enough light to hit the broad side of a barn. Durable finish withstands harsh environments.

Color: Silver gray

Weight: 12.0 lbs

Project:	**Type:**
Prepared By:	**Date:**

Driver Info

Type	Constant Current
120V	0.25A
208V	0.16A
240V	0.14A
277V	0.12A
Input Watts	30W

LED Info

Watts	26W
Color Temp	5000K (Cool)
Color Accuracy	76 CRI
L70 Lifespan	100,000 Hours
Lumens	3,685 lm
Efficacy	122.8 lm/W

Technical Specifications

Electrical

Driver:
Constant Current, 120V, 50/60 Hz, 700mA, 120V: 0.6A

THD:
6.8% at 120V, 12.4% at 277V

Power Factor:
99.5% at 120V, 93.6% at 277V

Photocell:
120-277V Twistlock photocell included. Photocell is compatible with 120-277V.

Surge Protection:
2kV

Compliance

UL Listed:
Suitable for wet locations

IESNA LM-79 & LM-80 Testing:
RAB LED luminaires and LED components have been tested by an independent laboratory in accordance with IESNA LM-79 and LM-80.

LED Characteristics

LEDs:
Multi-chip, high-output, long-life LED

Color Stability:
LED color temperature is warrantied to shift no more than 200K in color temperature over a 5-year period

Color Uniformity:
RAB's range of Correlated Color Temperature follows the guidelines of the American National Standard for Specifications for the Chromaticity of Solid State Lighting (SSL) Products, ANSI C78.377-2017.

Performance

Lifespan:
100,000-Hour LED lifespan based on IES LM-80 results and TM-21 calculations

Wattage Equivalency:
Equivalent to 150 HPS

Construction

Cold Weather Starting:
The minimum starting temperature is -40°C (-40°F)

Housing:
Precision die-cast aluminum housing and arm

Mounting:
Mounts on pole

Effective Projected Area:
EPA = 0.3

Recommended Mounting Height:
15 ft

Lens:
High-impact, frosted polycarbonate lens

Reflector:
High-reflectance white paint

Gaskets:
High-temperature silicone

Finish:
Our environmentally friendly polyester powder coatings are formulated for high-durability and long-lasting color

Green Technology:
Mercury and UV free. RoHS-compliant components.

Other

Patents:
The design of YBLED26 is protected by patents pending in US, Canada, China, Taiwan and Mexico

Copyright © 2024 RAB Lighting All Rights Reserved Note: Specifications are subject to change at any time without notice

Technical Specifications (continued)

Buy American Act Compliance:
RAB values USA manufacturing! Upon request, RAB may be able to manufacture this product to be compliant with the Buy American Act (BAA). Please contact customer service to request a quote for the product to be made BAA compliant.

Optical

BUG Rating:
B1 U2 G1

Dimensions

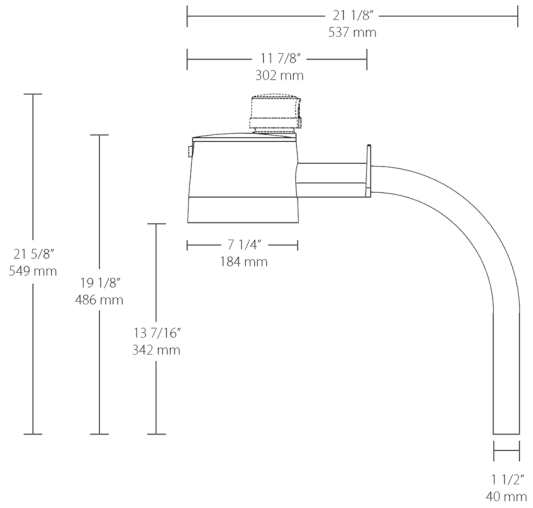

Features

- Widespread light distribution illuminates large areas
- Vandal-resistant
- High-impact polycarbonate lens
- Rugged die-cast aluminum housing withstands harsh environments
- Integrated dusk to dawn photocell
- 100,000-hour LED lifespan

Ordering Matrix

Family	Wattage	Color Temp	Mounting	Dimming	Options
YBLED	26		/ARM		/PCT
	26 = 26W **40 =** 40W **60 =** 60W	**Blank =** 5000K Cool **Y =** 3000K Warm **N =** 4000K Neutral	**Blank =** Wall **/ARM =** Arm	**Blank =** No Dimming [3] **/D10 =** 0-10V Dimming [1]	**Blank =** Button Photocell [2] **/PCU =** Standard Button Photocell **/PCT =** Twistlock Photocell **/5PR =** 5-Pin Receptacle **/LC =** Lightcloud Controller

[1] *Available only in 40W & 60W with /5PR or /LC*
[2] *Standard with 26W*
[3] *Available only in the Blank,/PCU or /PCT options*

Copyright © 2024 RAB Lighting All Rights Reserved Note: Specifications are subject to change at any time without notice