EZLED78TW



This 78W spotlight combines high lumen output and a concentrated narrow beam distribution to illuminate objects up to 80 feet away with brilliant precision. Ideal for lighting large flags, tall building façades and signage.

Color: White

Weight: 25.6 lbs

Project:	**Type:**
Prepared By:	**Date:**

Driver Info

Type	Constant Current
120V	0.82A
208V	0.53A
240V	0.46A
277V	0.40A
Input Watts	89.3W

LED Info

Watts	78W
Color Temp	5000K (Cool)
Color Accuracy	68 CRI
L70 Lifespan	100,000 Hours
Lumens	8,859 lm
Efficacy	99.2 lm/W

Technical Specifications

Compliance

UL Listed:
Suitable for wet locations. Suitable for ground mounting.

IESNA LM-79 & LM-80 Testing:
RAB LED luminaires and LED components have been tested by an independent laboratory in accordance with IESNA LM-79 and LM-80.

Construction

Effective Projected Area:
EPA = 1.2

Cold Weather Starting:
The minimum starting temperature is -40°C (-40°F)

Maximum Ambient Temperature:
Suitable for use in up to 40°C (104°F)

Thermal Management:
Superior thermal management with external "Air-Flow" fins

Housing:
Precision die-cast aluminum housing and door frame

Lens:
Tempered glass

Reflector:
Vacuum-metalized, specular thermoplastic

Gaskets:
High-temperature silicone

Finish:
Formulated for high durability and long-lasting color

Green Technology:
Mercury and UV free. RoHS-compliant components.

LED Characteristics

LEDs:
Three multi-chip, high-output, long-life LEDs

Color Consistency:
7-step MacAdam Ellipse binning to achieve consistent fixture-to-fixture color

Color Stability:
LED color temperature is warrantied to shift no more than 200K in color temperature over a 5-year period

Color Uniformity:
RAB's range of Correlated Color Temperature follows the guidelines of the American National Standard for Specifications for the Chromaticity of Solid State Lighting (SSL) Products, ANSI C78.377-2017.

Performance

Lifespan:
100,000-Hour LED lifespan based on IES LM-80 results and TM-21 calculations

Installation

Mounting:
Trunnion mount with cord (18-3AWG STOOW 600V 105° wet location rated 3 ft).

Optical

NEMA Type:
NEMA Beam Spread of 3H x 3V

Other

Warranty:
RAB warrants that our LED products will be free from defects in materials and workmanship for a period of five (5) years from the date of delivery to the end user, including coverage of light output, color stability, driver performance and fixture finish. RAB's warranty is subject to all terms and conditions found at rablighting.com/warranty.

Patents:
The design of EZLED is protected by patents in U.S. Pat D679,856, and pending patents in Canada, China, Taiwan and Mexico.

Copyright © 2025 RAB Lighting All Rights Reserved Note: Specifications are subject to change at any time without notice

Technical Specifications (continued)

Buy American Act Compliance:
RAB values USA manufacturing! Upon request, RAB may be able to manufacture this product to be compliant with the Buy American Act (BAA). Please contact customer service to request a quote for the product to be made BAA compliant.

Electrical

Driver:
3x26W drivers Constant current, Class2, 100-277V. 50/60 Hz, 6KV Surge Protection, 720mA, 100-277V 0.4A, Power Factor 99%.

THD:
16.8% at 277V

Dimensions

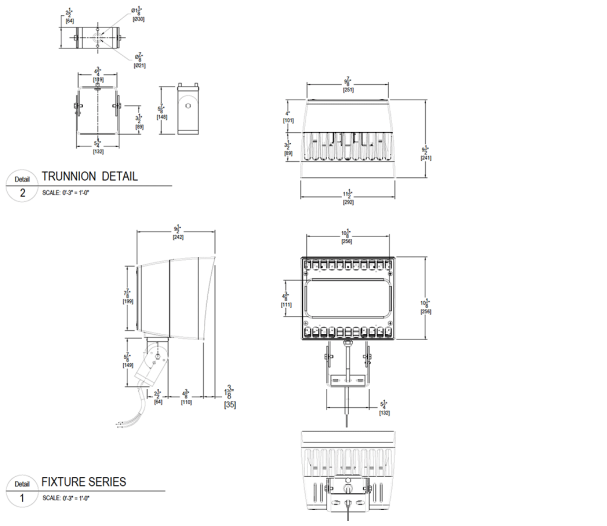

Features

- High powered narrow beam spotlight
- Illuminates objects at a distance of 80 feet
- Available in NEMA type 3H x 3V and 4H x 4V
- Trunnion or slipfitter mounting options available
- Outperforms equivalent MH fixtures

Ordering Matrix

Family	Wattage	Mounting	Color Temp	Distribution	Finish	Driver	Dimming	Control Options
EZLED	78	T			W			
	78 = 78W	**SF =** Slipfitter **T =** Trunnion	**Blank =** 5000K Cool **N =** 4000K Neutral **Y =** 3000K Warm	**Blank =** NEMA 3H x 3V **B44 =** NEMA 4H x 4V	**Blank =** Bronze **W =** White	**Blank =** 120-277V	**Blank =** None (Standard) **/D10 =** 0-10V Dimming **/BL =** Bi-Level	**Blank =** No Option **/PC =** 120V Button Photocell **/PC2 =** 277V Button Photocell **/PCS =** 120V Swivel Photocell **/PCS2 =** 277V Swivel Photocell **/PCT =** 120-277V Twistlock Photocell

Copyright © 2025 RAB Lighting All Rights Reserved Note: Specifications are subject to change at any time without notice