LFLED4LVA



Compact 4 Watt LED floodlight works with 12V AC lighting systems. Perfectly suited for small-scale landscape lighting applications.

Color: Bronze

Weight: 1.6 lbs

Project:	Type:
Prepared By:	Date:

Driver Info

Type	Constant Current
120V	N/A
208V	N/A
240V	N/A
277V	N/A
Input Watts	4.5W

LED Info

Watts	4W
Color Temp	4800K (Cool)
Color Accuracy	70 CRI
L70 Lifespan	100,000 Hours
Lumens	500 lm
Efficacy	111.1 lm/W

Technical Specifications

Compliance

UL Listed:
Suitable for wet locations. Suitable for ground mounting.

Optical

NEMA Type:
NEMA Beam Spread of 4H x 4V

Spot Lens:
Optional spot lens enables a tool-less conversion to a NEMA Type 3H x 3V. Great for accent lighting or grazing buildings for an artistic touch. Spot reflector kit available here.

Narrow Spot Lens:
Optional narrow spot lens enables a tool-less conversion to a NEMA Type 3H x 2V. Great for accent lighting or grazing buildings for an artistic touch. Narrow spot reflector kit available here.

Construction

Lens:
Microprismatic diffuser produces a smooth distribution and low glare

Cold Weather Starting:
The minimum starting temperature is -40°C (-40°F)

Maximum Ambient Temperature:
Suitable for use in up to 40°C (104°F)

Thermal Management:
Optimized using computational fluid dynamics software to ensure long LED and driver lifespan

Housing:
Precision die-cast aluminum housing, lens frame and mounting arm

Gaskets:
High-temperature silicone

Finish:
Formulated for high durability and long-lasting color

Green Technology:
Mercury and UV free. RoHS-compliant components.

Performance

Lifespan:
100,000-Hour LED lifespan based on IES LM-80 results and TM-21 calculations

LED Characteristics

LED:
Multi-chip, high-output, long-life LED

Color Consistency:
4-step MacAdam Ellipse binning to achieve consistent fixture-to-fixture color

Color Stability:
LED color temperature is warrantied to shift no more than 200K in color temperature over a 5-year period

Color Uniformity:
RAB's range of Correlated Color Temperature follows the guidelines of the American National Standard for (SSL) Products, ANSI C78.377-2017.

Electrical

Driver:
Class 2, 50/60 Hz, 12VAC Max, 0.5A

Voltage:
12V AC

Other

Wiring:
30" SPT1 zip cord included. Transformers provided by others.

Copyright © 2025 RAB Lighting All Rights Reserved Note: Specifications are subject to change at any time without notice

Technical Specifications (continued)

Warranty:
RAB warrants that our LED products will be free from defects in materials and workmanship for a period of five (5) years from the date of delivery to the end user, including coverage of light output, color stability, driver performance and fixture finish. RAB's warranty is subject to all terms and conditions found at rablighting.com/warranty.

Patents:
The design of the LFLED is protected by Taiwan Patent 01510966 and pending patents in US, Canada, China, and Mexico

Buy American Act Compliance:
RAB values USA manufacturing! Upon request, RAB may be able to manufacture this product to be compliant with the Buy American Act (BAA). Please contact customer service to request a quote for the product to be made BAA compliant.

Dimensions

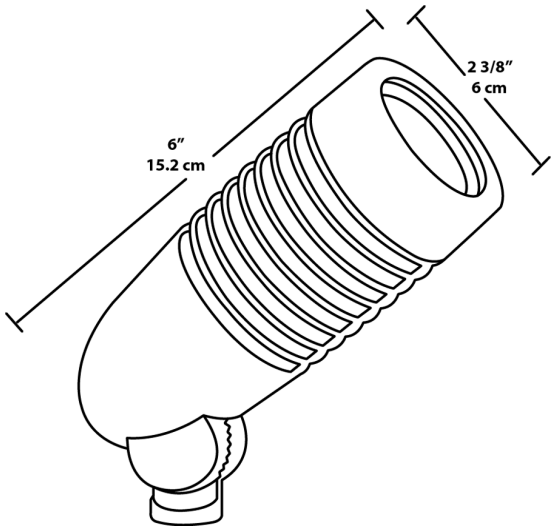

Features

- Works with existing 12V AC landscape lighting systems
- Replaces 35W MR16 halogen
- Reduces energy consumption by 85%
- Optional spot and narrow spot reflector kits available
- 100,000-Hour LED lifespan

Ordering Matrix

Family	Wattage	Color Temp	Type	Finish
LFLED	4		LV	A
	4 = 4W	**Blank =** 4800K Cool **N =** 4000K Neutral **Y =** 3000K Warm	**LV =** Low Voltage	**A =** Bronze **B =** Black **VG =** Verde Green **W =** White

Copyright © 2025 RAB Lighting All Rights Reserved Note: Specifications are subject to change at any time without notice