ALED80



Color: Bronze

Weight: 19.1 lbs

Project:	**Type:**
Prepared By:	**Date:**

Driver Info

Type	Constant Current
120V	0.71A
208V	0.41A
240V	0.36A
277V	0.31A
Input Watts	84.6W

LED Info

Watts	80W
Color Temp	5000K (Cool)
Color Accuracy	72 CRI
L70 Lifespan	100,000 Hours
Lumens	10,116 lm
Efficacy	119.6

Technical Specifications

Compliance

UL Listed:
Suitable for wet locations. Suitable for mounting within 4 ft of the ground.

IESNA LM-79 & LM-80 Testing:
RAB LED luminaires and LED components have been tested by an independent laboratory in accordance with IESNA LM-79 and LM-80.

DLC Listed:
This product is listed by Design Lights Consortium (DLC) as an ultra-efficient premium product that qualifies for the highest tier of rebates from DLC Member Utilities. Designed to meet DLC 5.1 requirements.
DLC Product Code: P49AUCQP

Electrical

Driver:
Constant Current, Class 2, 120-277V, 50-60Hz, 120V: 0.71A, 208V: 0.41A, 240V: 0.36A, 277V: 0.31A

Dimming Driver:
Driver includes dimming control wiring for 0-10V dimming systems. Requires separate 0-10V DC dimming circuit. Dims down to 10%.

THD:
5.99% at 120V, 10.03% at 277V

Power Factor:
99.6% at 120V, 93.6% at 277V

Surge Protection:
6kV

Performance

Lifespan:
100,000-Hour LED lifespan based on IES LM-80 results and TM-21 calculations

Wattage Equivalency:
Equivalent to 250W Metal Halide

Construction

IES Classification:
The Type IV distribution (also known as a Forward Throw) is especially suited for mounting on the sides of buildings and walls, and for illuminating the perimeter of parking areas. It produces a semicircular distribution with essentially the same candlepower at lateral angles from 90° to 270°.

Ambient Temperature:
Suitable for use in up to 40°C (104°F)

Cold Weather Starting:
The minimum starting temperature is -40°C (-40°F)

Thermal Management:
Cast aluminum Thermal Management system for optimal heat sinking. The ALED is designed for cool operation, most efficient output and maximum LED life by minimizing LED junction temperature.

Housing:
Precision die-cast aluminum housing, lens frame

Arm:
Die-cast aluminum with wiring access plate

Reflector:
Specular vacuum-metallized polycarbonate

Gaskets:
High-temperature silicone

EPA:
1 Fixture: 1.5
2 Fixtures at 90°: 2.4
2 Fixtures at 180°: 2.9
3 Fixtures at 90°: 3.2
4 Fixtures at 90°: 3.2

Finish:
Formulated for high durability and long-lasting color

Green Technology:
Mercury and UV free. RoHS-compliant components.

Copyright © 2024 RAB Lighting All Rights Reserved Note: Specifications are subject to change at any time without notice

Technical Specifications (continued)

LED Characteristics

LEDs:
Two (2) multi-chip, high-output, long-life LEDs

Color Consistency:
7-step MacAdam Ellipse binning to achieve consistent fixture-to-fixture color

Color Stability:
LED color temperature is warrantied to shift no more than 200K in color temperature over a 5-year period

Color Uniformity:
RAB's range of Correlated Color Temperature follows the guidelines of the American National Standard for Specifications for the Chromaticity of Solid State Lighting (SSL) Products, ANSI C78.377-2017.

Other

Warranty:
RAB warrants that our LED products will be free from defects in materials and workmanship for a period of five (5) years from the date of delivery to the end user, including coverage of light output, color stability, driver performance and fixture finish. RAB's warranty is subject to all terms and conditions found at rablighting.com/warranty.

Patents:
The ALED design is protected by patents pending in the U.S., Canada, China, Taiwan and Mexico.

Buy American Act Compliance:
RAB values USA manufacturing! Upon request, RAB may be able to manufacture this product to be compliant with the Buy American Act (BAA). Please contact customer service to request a quote for the product to be made BAA compliant.

Optical

BUG Rating:
B1 U1 G3

Copyright © 2024 RAB Lighting All Rights Reserved Note: Specifications are subject to change at any time without notice

ALED80

Dimensions

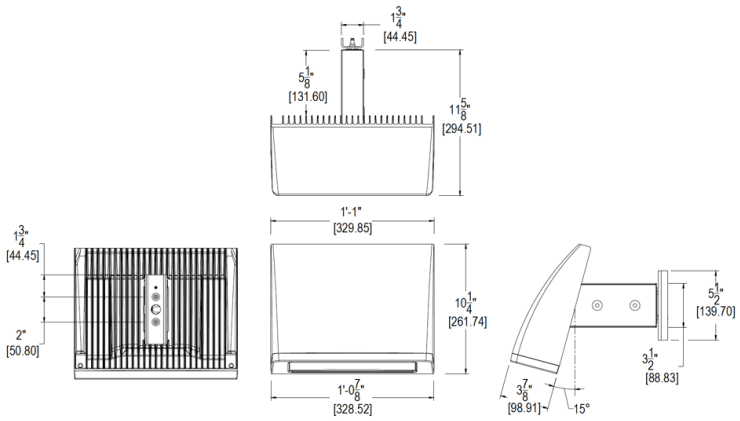

Features

- 75% energy savings
- Superior heat sinking with die cast aluminum housing and external fins
- 100,000-hour LED lifespan
- 5-Year, No-Compromise Warranty

Ordering Matrix

Family	Cutoff	Wattage	Color Temp	Finish	Driver Options	Options
ALED		80				
	C = Cutoff (7.5°) **FC =** Full Cutoff (0°) **Blank =** Standard (15°)	**52 =** 52W **80 =** 80W	**Blank =** 5000K Cool **N =** 4000K Neutral **Y =** 3000K Warm	**Blank =** Bronze **W =** White	**/480 =** 480V **/D10 =** 0-10V Dimming **/BL =** Bi-Level **Blank =** 120-277V	**Blank =** No Option **/PCS =** 120V Swivel Photocell **/PCS2 =** 277V Swivel Photocell **/PCS4 =** 480V Swivel Photocell **/PCT =** 120-277V Twistlock Photocell **/PCT4 =** 480V Twistlock Photocell **/LC =** Lightcloud Controller

Copyright © 2024 RAB Lighting All Rights Reserved Note: Specifications are subject to change at any time without notice