X17XFU140SFW/480



Color: White

Weight: 10.0 lbs

Project:	**Type:**
Prepared By:	**Date:**

Driver Info

Type	Constant Current
120V	N/A
208V	N/A
240V	N/A
277V	0.32A
Input Watts	70-142,6W

LED Info

Watts	140W
Color Temp	3000K/4000K/5000K
Color Accuracy	83-85 CRI
L70 Lifespan	100,000 Hours
Lumens	8980-19532 lm
Efficacy	128.3-142.6 lm/W

Technical Specifications

Field Adjustability

3-Way Field Adjustable:
Field Adjustable Light Output:
70W/100W/140W (factory default 140W)
Color temperature (selectable by 3000K, 4000K and 5000K)

Compliance

UL Listed:
Suitable for wet locations

IESNA LM-79 & LM-80 Testing:
RAB LED luminaires and LED components have been tested by an independent laboratory in accordance with IESNA LM-79 and LM-80.

IP Rating:
Ingress protection rating of IP65 for dust and water

DLC Listed:
This product is listed by Design Lights Consortium (DLC) as an ultra-efficient premium product that qualifies for the highest tier of rebates from DLC Member Utilities. Designed to meet DLC 5.1 requirements.
DLC Product Code: PNT2IW3O

Electrical

Driver:
Constant Current, Class 2, 480V, 50/60Hz, 480V: 0.32A

Dimming Driver:
Driver includes wiring for 0-10V dimming systems. Dim as low as 10%.

Photocell:
480V selectable photocell that can be turned on and off.

Surge Protection:
CM: 6kV
DM: 4kV

LED Characteristics

LEDs:
Long-life, high-efficacy, surface-mount LEDs

Color Uniformity:
RAB's range of Correlated Color Temperature follows the guidelines of the American National Standard for Specifications for the Chromaticity of Solid State Lighting (SSL) Products, ANSI C78.377-2017.

Construction

Cold Weather Starting:
The minimum starting temperature is -40°C (-40°F)

Ambient Temperature :
Max Power Temp Rating: 40°C (104°F)
Middle Power Temp Rating: 48°C (118°F)
Low Power Temp Rating: 55°C (131°F)

Housing:
Precision die-cast aluminum

Mounting:
Slipfitter with 180° pivot available for mounting on 2 3/8" tenon

Lens:
Tempered glass

Reflector:
Polycarbonate

Tilt Increment:
Rotates in 6 degree increments

Effective Projected Area:
EPA = 1.35

Finish:
Formulated for high durability and long-lasting color

Green Technology:
Mercury and UV free. RoHS-compliant components.

Optical

NEMA Type:
NEMA Beam Spread of 7H x 7V

Copyright © 2023 RAB Lighting All Rights Reserved Note: Specifications are subject to change at any time without notice

Technical Specifications (continued)

Other

Shorting Cap:
Shorting Cap for Twistlock Receptacle

5 Yr Limited Warranty:
The RAB 5-year, limited warranty covers light output, driver performance and paint finish. RAB's warranty is subject to all terms and conditions found at rablighting.com/warranty.

Note:
All values are typical (tolerance +/- 10%)

Buy American Act Compliance:
RAB values USA manufacturing! Upon request, RAB may be able to manufacture this product to be compliant with the Buy American Act (BAA). Please contact customer service to request a quote for the product to be made BAA compliant.

Dimensions

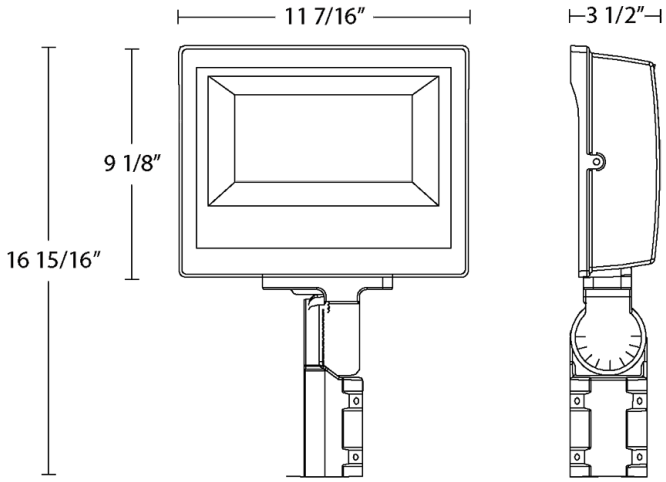

Features

- 3-Way field adjustability
- 0-10V Dimming, standard
- 100,000-hour LED lifespan
- Selectable photocell (on/off) included
- 5-Year, limited warranty

Copyright © 2023 RAB Lighting All Rights Reserved Note: Specifications are subject to change at any time without notice

X17XFU140SFW/480

Ordering Matrix

Family	Wattage	Field Adjustability	Color Temp	Mounting	Finish	Voltage	Options
X17	XFU	140		SF	W	/480	
	35 = 35/25/15W **60 =** 60/50/30W **80 =** 80/60/40W **15 =** 15W **35 =** 35W **60 =** 60W **80 =** 80W **105 =** 105W **140 =** 140W **105 =** 105/75/50W **140 =** 140/100/70W **205 =** 205/150/100W **330 =** 330/250/170W	**XFU =** 3-Way Field Adjustable	**Blank =** 3000K/4000K/5000K Selectable	**Blank =** Knuckle **SF =** Slipfitter **T =** Trunnion	**Blank =** Bronze **W =** White	**Blank =** 120-277V **/480 =** 480V	**Blank =** Selectable photocell

Copyright © 2023 RAB Lighting All Rights Reserved Note: Specifications are subject to change at any time without notice