SM34-5R-7-930-120-W

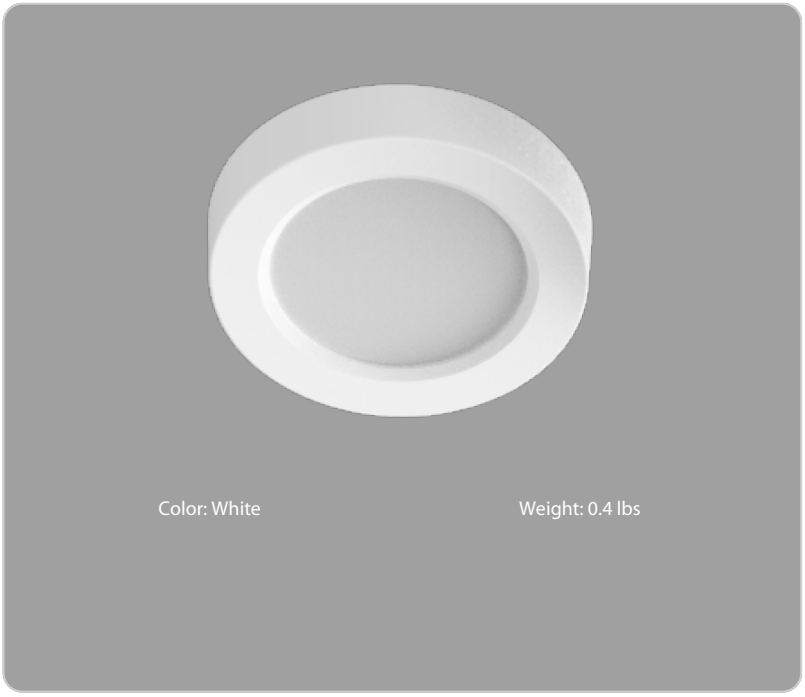

Color: White

Weight: 0.4 lbs

Project:	**Type:**
Prepared By:	**Date:**

Driver Info

Type	Constant Current
120V	0.07A
208V	N/A
240V	N/A
277V	N/A
Input Watts	N/A

LED Info

Watts	7W
Color Temp	3000K
Color Accuracy	90 CRI
L70 Lifespan	50,000 Hours
Lumens	550 lm
Efficacy	78.6

Technical Specifications

Performance

Description:
The SM34 is an easy to install, flexible, affordable, and stylish option for new construction or retrofit into an existing junction box or recessed housing. Mounting kit for recessed housing sold separately.

Product Type:
Surface & Flush Mounts

Input Wattage:
7W

Lumens:
550lm

Efficacy:
78.6lm/W

L70 Lifespan:
50,000-Hour LED lifespan based on IES LM-70 results

Compliance

UL Listed:
Suitable for wet locations

Energy Star Approved:
ENERGY STAR® Version 2.2 Certified

Energy Star ID:
2389848

Trade Agreements Act Compliant:
This product is a product of Cambodia and a "designated country" end product that complies with the Trade Agreements Act

Electrical

Dimming Driver:
TRIAC compatible dimmer with dimming as low as 10%.

THD:
≤20%

Power Factor:
≥0.9

Flicker:
≤30%

Input Voltage:
120V

Operating Frequency:
60Hz

Construction

Material:
Plastic

Trim Style:
Smooth Trim

Shape:
Round

Mounting:
Surface and recessed mount

Operating Temperature:
-20°C (-4°F) to 40°C (104°F)

Size:
5.5"

Optical

Beam Angle:
110°

LED Characteristics

R9 Value:
High color performance with R9 greater than or equal to 50

Copyright © 2024 RAB Lighting All Rights Reserved Note: Specifications are subject to change at any time without notice

Technical Specifications (continued)

Other

Warranty:

RAB warrants that our LED products will be free from defects in materials and workmanship for a period of five (5) years from the date of delivery to the end user, including coverage of light output, color stability, driver performance and fixture finish. RAB's warranty is subject to all terms and conditions found at rablighting.com/warranty.

Buy American Act Compliance:

RAB values USA manufacturing! Upon request, RAB may be able to manufacture this product to be compliant with the Buy American Act (BAA). Please contact customer service to request a quote for the product to be made BAA compliant.

Dimensions

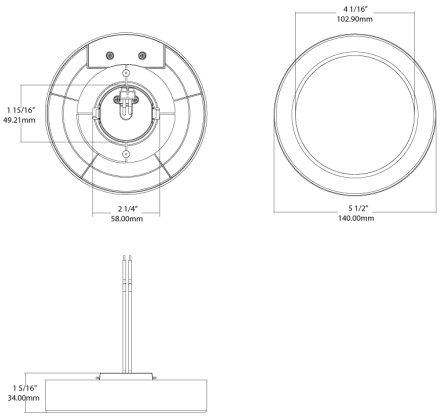

Features

- Quick push in and rotate installation concept for easy fit into J-Box
- Includes E26 cap with friction clips & V-type spring as an extra accessory
- Matte white, fade resistant polyester trim design
- High performance >90CRI to provide high color performance
- Dimmable on Triac dimmers

Ordering Matrix

Family	Size	Shape	Wattage	CRI/Color Temp	Voltage	Finish
SM34	5	R	7	930	120	W
	5 = 5" **7** = 7"	**R** = Round	**7** = 7W **9** = 9W	**930** = 90 CRI, 3000K	**120** = 120V	**W** = White

Copyright © 2024 RAB Lighting All Rights Reserved Note: Specifications are subject to change at any time without notice