EZPAN2X4-50/D10/E2

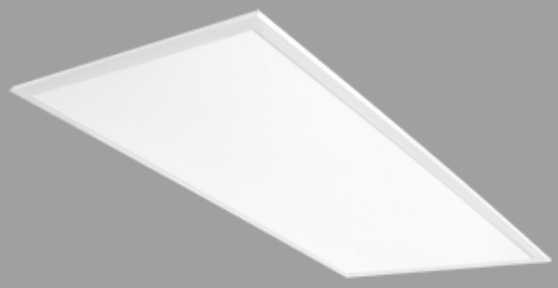

2' x 4' EZPAN edgelit LED panel lights with emergency battery Backup that will operate the LED Lamp for 90 minutes if power fails. Install in drop ceilings or use optional surface, pendant or recessed (dry wall) mounting kits.

Color: White

Weight: 19.0 lbs

Project:	**Type:**
Prepared By:	**Date:**

Driver Info

Type	Constant Current
120V	0.42A
208V	0.25A
240V	0.21A
277V	0.18A
Input Watts	49.3W

LED Info

Watts	50W
Color Temp	5000K (Cool)
Color Accuracy	85 CRI
L70 Lifespan	60,000 Hours
Lumens	5,678 lm
Efficacy	115.2

Technical Specifications

Compliance

UL Listed:
Suitable for damp locations

CCEA Compliant:
Luminaire Requirements used in Environmental Air Space per the electrical code specification of the City of Chicago

IESNA LM-79 & LM-80 Testing:
RAB LED luminaires and LED components have been tested by an independent laboratory in accordance with IESNA LM-79 and LM-80.

Trade Agreements Act Compliant:
This product is a product of Cambodia and a "designated country" end product that complies with the Trade Agreements Act

DLC Listed:
This product is on the Design Lights Consortium (DLC) Qualified Products List and is eligible for rebates from DLC Member Utilities. Designed to meet DLC 5.1 requirements.
DLC Product Code: PUC5386Y

Other

Note:
All values are typical (tolerance +/- 10%)

Warranty:
RAB warrants that our LED products will be free from defects in materials and workmanship for a period of five (5) years from the date of delivery to the end user, including coverage of light output, color stability, driver performance and fixture finish. RAB's warranty is subject to all terms and conditions found at rablighting.com/warranty.

Buy American Act Compliance:
RAB values USA manufacturing! Upon request, RAB may be able to manufacture this product to be compliant with the Buy American Act (BAA). Please contact customer service to request a quote for the product to be made BAA compliant.

Performance

Lifespan:
60,000-Hour LED lifespan based on IES LM-80 results and TM-21 calculations

Wattage Equivalency:
Equivalent to (4)F32T8 or (4)F28T5

Electrical

Driver:
Constant Current, Class 2, 50/60 Hz, 120-277V, 120V: 0.42A, 208V: 0.25A, 240V: 0.21A, 277V: 0.18A

Dimming Driver:
Driver includes dimming control wiring for 0-10V dimming systems. Requires separate 0-10V DC dimming circuit. Dims down to 10%.

THD:
8.87% at 120V, 5.3% at 277V

Power Factor:
99.2% at 120V, 96.7% at 277V

Battery Backup:
Battery backup will operate the fixture for 90 minutes if power fails. Wired for 120-277V.

Battery Backup Light Loss Factor:
0.26

Construction

IC Rated:
Suitable for insulated ceilings

Maximum Ambient Temperature:
Suitable for use in up to -30°C (-22°F) to 50°C(122°F)

Lens:
Frosted polystyrene

Mounting:
Recessed ceiling

Copyright © 2024 RAB Lighting All Rights Reserved Note: Specifications are subject to change at any time without notice

Technical Specifications (continued)

Housing:
Lightweight aluminum housing, steel pan and junction box

Installation:
Standard integral T-bar clips secure the fixture to T-bars and prevent T-system separation

Finish:
Formulated for high durability and long-lasting color

Green Technology:
Mercury and UV free. RoHS-compliant components.

LED Characteristics

LEDs:
Long-life, high-efficacy, surface-mount LEDs

Dimensions

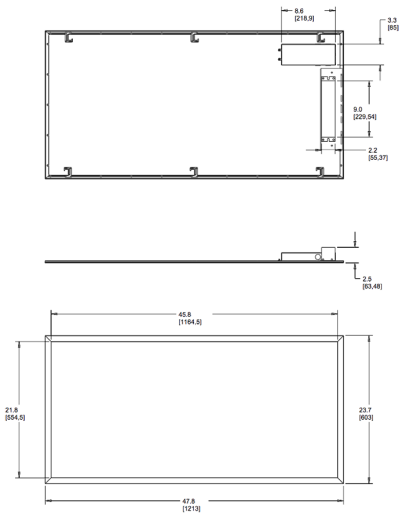

Features

- Perfect for shallow plenums
- Even and diffuse ambient illumination, ideal for spaces where glare-free lighting is required
- 0-10V dimmable driver, standard

Ordering Matrix

Family	Size		Wattage	Color Temp	Dimming (standard)	Control Options	Other Options
EZPAN	2X4	–	50		/D10		/E2
	2X4 = 2' x 4' **2X2 =** 2' x 2' **1X4 =** 1' x 4'		**17 =** 17W **30 =** 30W **40 =** 40W **50 =** 50W	**Blank =** 5000K Cool **N =** 4000K Neutral **YN =** 3500K Warm Neutral **Y =** 3000K Warm	**/D10 =** 0-10V Dimming	**Blank =** No Option **/LC =** Lightcloud Controller	**Blank =** None **/E2 =** Battery Backup

Copyright © 2024 RAB Lighting All Rights Reserved Note: Specifications are subject to change at any time without notice