NDLED6SD-80YN-M-S



High-end, new construction LED downlights in 6" make installation a breeze when you're framing out a space from the ground up or when you have access from the top of the ceiling. .

Color: Silver trim matte silver cone

Weight: 2.4 lbs

Project:	**Type:**
Prepared By:	**Date:**

Driver Info

Type	Sold Separately
120V	N/A
208V	N/A
240V	N/A
277V	N/A
Input Watts	See Rough-in*

LED Info

Watts	N/A
Color Temp	3500K (Warm Neutral)
Color Accuracy	80 CRI
L70 Lifespan	100,000 Hours
Lumens	N/A
Efficacy	N/A

Technical Specifications

Compliance

UL Listed:
Suitable for wet locations covered ceiling

Energy Star Approved:
ENERGY STAR® Version 2.0 Certified

Construction

Trim Component:
This component must be ordered with New Construction Square Rough-In in order to make a complete fixture. See here for New Construction Square Rough-In.

Housing:
Professional-grade, die-cast aluminum construction

Trim Ring:
Silver powder coated die cast trim ring

Trim Cone:
Matte silver square trim cone

Drop Ceiling Installation:
NDLED can be installed in drop ceiling tiles when using optional c-channel bars and following local construction codes

Aperture Size:
6" Trim Module

Easy Installation:
The EZ-Connector makes installation easy

Junction Box:
Integral junction box with wiring capacity for
Min 90°C supply conductors
4 in 4 out

Air Tight:
Housing certified Air Tight as per ASTM E283

Electrical

Dimming Driver:
0 - 10V (at 120-277V), TRIAC and ELV (at 120V only).
See dimmer compatibility guide here.

Dimming:
Dimmable. Requires rough-in with dimming driver.

Optical

Optics:
80° beam spread with specular thermoplasic optics and Nanostructure lens technology for smooth light output and high efficiency

LED Characteristics

Color Consistency:
3-step MacAdam Ellipse binning to achieve consistent fixture-to-fixture color

Other

Warranty:
RAB warrants that our LED products will be free from defects in materials and workmanship for a period of five (5) years from the date of delivery to the end user, including coverage of light output, color stability, driver performance and fixture finish. RAB's warranty is subject to all terms and conditions found at rablighting.com/warranty.

Buy American Act Compliance:
RAB values USA manufacturing! Upon request, RAB may be able to manufacture this product to be compliant with the Buy American Act (BAA). Please contact customer service to request a quote for the product to be made BAA compliant.

Copyright © 2024 RAB Lighting All Rights Reserved Note: Specifications are subject to change at any time without notice

NDLED6SD-80YN-M-S

Dimensions

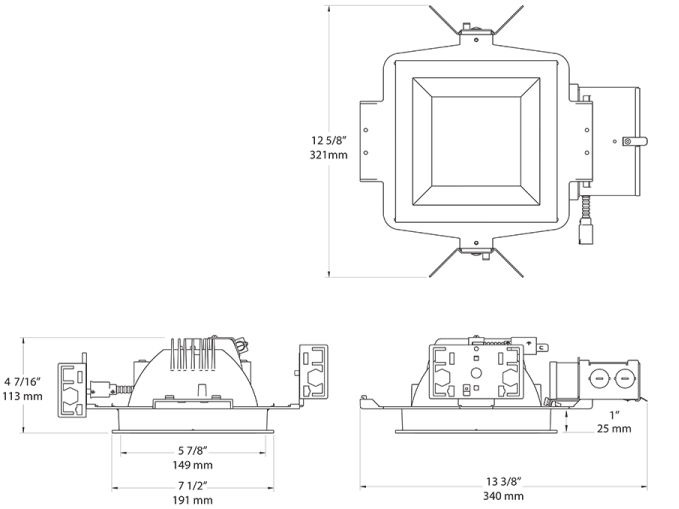

Features

- Butterfly bracket allows mounting with bar stock, "C" channel, 1/2" conduit or nailer bars
- Low-profile design allows for installation in ceilings with limited space
- Absolute White 3-step consistency and black body accurate
- Nanostructure lens eliminates "hot spots" providing smooth and efficient light

Ordering Matrix

Family	Size	Shape	Driver	Beam Spread	Color Temp	CRI	Cone Color	Trim Color
NDLED	6	S	D	80	YN		M	S
	6 = 6"	**S =** Square	**D =** Universal Dimming	**50 =** 50 degrees **80 =** 80 degrees **W =** Wall Washer	**N =** 4000K Neutral **YN =** 3500K Warm Neutral **Y =** 3000K Warm **YY =** 2700K Residential Warm	**Blank =** 82 CRI **HC =** 92 CRI	**S =** Specular **M =** Matte Silver **W =** White **B =** Black	**S =** Silver **W =** White **B =** Black

Copyright © 2024 RAB Lighting All Rights Reserved Note: Specifications are subject to change at any time without notice