SM9S20940UNVTW

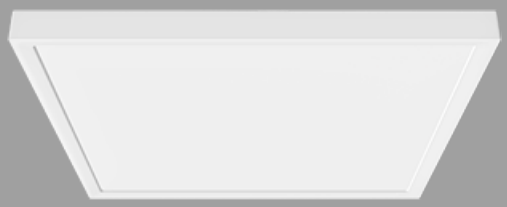

UPC: 019813513607

Color: White

Weight: 1.3 lbs

Project:	**Type:**
Prepared By:	**Date:**

Driver Info

Type	Constant Current
120V	0.166A
208V	0.11A
240V	0.095A
277V	0.08A
Input Watts	20W

LED Info

Watts	N/A
Color Temp	4000K (Neutral)
Color Accuracy	90 CRI
L70 Lifespan	50,000 Hours
Lumens	1,677 lm
Efficacy	60

Technical Specifications

Compliance

UL Listed:
Suitable for wet locations

Electrical

Dimming Driver:
TRIAC compatible dimmer with dimming as low as 5%. See dimmer compatibility guide here.

Performance

Lifespan:
50,000-Hour LED lifespan based on IES LM-80 results and TM-21 calculations

Construction

IC Rated:
Suitable for direct contact with insulation

Air Tight:
Housing certified Air Tight as per ASTM E283

Housing:
Durable aluminum

Trim Style:
Smooth Trim

Cold Weather Starting:
The minimum starting temperature is -30°C (-22°F)

Maximum Ambient Temperature:
Suitable for use in up to 40°C (104°F)

Lens:
Transparent Polymethyl Methacrylate (PMMA)

Finish:
Formulated for high durability and long-lasting color

Green Technology:
Mercury and UV free. RoHS-compliant components.

Socket Adapter:
Edison 26 Medium Base Socket adapter included in box

Mounting:
Jam clips included secure installation

Optical

Beam Angle:
120°

LED Characteristics

LEDs:
Long-life, high-efficacy, surface-mount LEDs

Other

Warranty:
RAB warrants that our LED products will be free from defects in materials and workmanship for a period of five (5) years from the date of delivery to the end user, including coverage of light output, color stability, driver performance and fixture finish. RAB's warranty is subject to all terms and conditions found at rablighting.com/warranty.

Buy American Act Compliance:
RAB values USA manufacturing! Upon request, RAB may be able to manufacture this product to be compliant with the Buy American Act (BAA). Please contact customer service to request a quote for the product to be made BAA compliant.

Copyright © 2024 RAB Lighting All Rights Reserved Note: Specifications are subject to change at any time without notice

Case and Pallet Dimensions

	QTY	LENGTH (in)	WIDTH (in)	HEIGHT (in)
CASE	12	10.8	8.1	4
PALLET	2880	43.2	37.9	48.7

Dimension

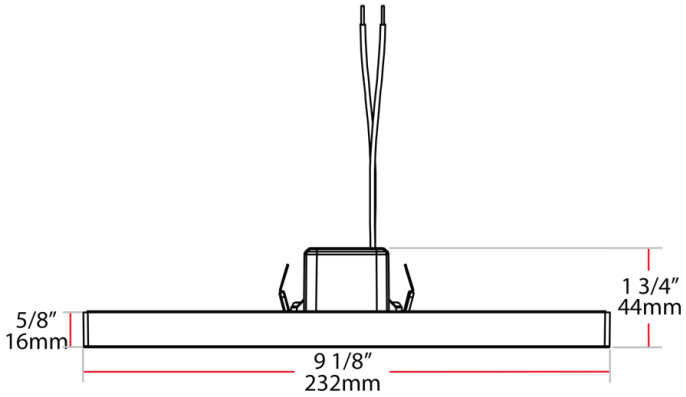

Ordering Matrix

Family	Size	Shape	Wattage	CRI/Color Temp	Voltage	Dimming	Finish
SM	9	S	20	940	UNV	T	W
	7 = 7" **9** = 9" **5.5** = 5.5"	**S** = Square **R** = Round	**20** = 1200lm-1700lm **15** = 900lm-1100lm **10** = 750lm-850lm	**930** = 90 CRI, 3000K Warm **827** = 80 CRI, 2700K Residential Warm **830** = 80 CRI, 3000K Warm **840** = 80 CRI, 4000K Neutral **927** = 90 CRI, 2700K Residential Warm **940** = 90 CRI, 4000K Neutral	**120** = 120V **UNV** = 120-277V	**Blank** = Blank **T** = TRIAC Dimming	**W** = White

Copyright © 2024 RAB Lighting All Rights Reserved Note: Specifications are subject to change at any time without notice