

Reflector Infrared BR40,PAR38

175PAR38/HEAT/CL 120V 12/1

Philips Family of Specialty Incandescents provide the perfect light for dramatic accents and display lighting as well as general lighting in a variety of applications. Philips Infrared lamps are suited for heating and drying in industrial and commercial aplications. These incandescent, gas-filled infrared heat lamps come up to full temperature almost immediately, eliminating costly warm-up time. Highly efficient heat generators that produce a minimum of light rays and a high amount of infrared radiation. The BR40 lamp provides a built-in reflector for radiant energy control.

Product data

General Information	
Cap-Base	E26/50X39 [Skirted Medium Screw (PAR Lamps)]
Operating Position	UNIVERSAL [Any or Universal (U)]
Nominal lifetime	5,000 hour(s)
Rated Lifetime (Hours)	5,000 hour(s)
Lighting Technology	Incandescent

Light Technical	
Color Designation	C

Operating and Electrical	
Power Consumption	175 W
Voltage (Nom)	115-125 V

Controls and Dimming	
Dimmable	Yes

Mechanical and Housing	
Bulb Finish	Clear
Bulb Material	Hard Glass
Bulb Shape	PAR38 [PAR 4.75 inch/121mm]

Product Data	
Order product name	175PAR38/HEAT/CL 120V 12/1
Full product name	175PAR38/HEAT/CL 120V 12/1
Full product code	904667711626215
Order code	923813534608
Material Nr. (12NC)	923813534608
Numerator - Quantity Per Pack	1
EAN/UPC - Product/Case	046677116262
Numerator - Packs per outer box	12
EAN/UPC - Case	50046677145519

Reflector Infrared BR40,PAR38

Dimensional drawing

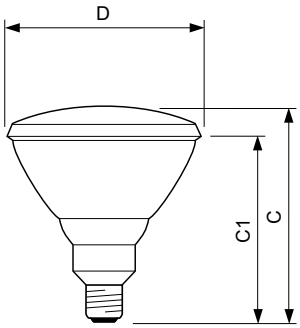

Product	D	C (max)	C1 (max)
175PAR38/HEAT/CL 120V 12/1	121 mm	135 mm	123 mm

© 2023 Signify Holding All rights reserved. Signify does not give any representation or warranty as to the accuracy or completeness of the information included herein and shall not be liable for any action in reliance thereon. The information presented in this document is not intended as any commercial offer and does not form part of any quotation or contract, unless otherwise agreed by Signify. Philips and the Philips Shield Emblem are registered trademarks of Koninklijke Philips N.V.