Product data sheet
Characteristics

XGCS49LB201
Panel mounting smart antenna with lights, Radio frequency identification XG, pilot



Main

Range of Product	Telemecanique Radio frequency identification XG
Product or Component Type	Panel mounting smart antenna with lights
RFID compact station name	XGCS
RFID Frequency	13.56 MHz
Design	Diameter 22 mounting
Electrical connection	5 1 male connector M12
Transmission Rate	9600 bauds...115200 bauds (automatic detection)
Outer dimension	40 x 40 x 40 mm
Product Compatibility	RFID microchip Texas (Tag-it HFI) RFID microchip INSIDE (micropass) RFID microchip Fujitsu (MB89R118 - MB89R119) RFID microchip NXP (SL2, SL1, Ultralight, Std 1K/4K, Desfire) RFID microchip STM (CRIX4K) RFID microchip Microelectronic (EM4135)
[Sn] nominal sensing distance	0.39…2.76 in (10…70 mm)
[Us] rated supply voltage	24 V DC Protective Extra Low Voltage

Complementary

Communication Port Protocol	Modbus RTU
Communication port support	RS485 non isolated
Associated tag type	Automatic detection of the type of tag ISO 15693 standard tags ISO 14443 standard tags
Supply voltage limits	19.2…29 V DC
Current Consumption	< 60 mA
Status LED	Communication network 1 LED dual colour) RFID communication 1 LED dual colour) Multi-colour LED 2 LEDs multi-colour)
Tightening torque	< 2.2 N.m
Marking	CE
Net Weight	0.13 lb(US) (0.057 kg)

Environment

Product Certifications	UL, FCC
Standards	ETSI EN 301 489-3 ETSI EN 300 330-2 ETSI EN 300 330-1 ETSI EN 301 489-1
Ambient Air Temperature for Operation	-13…158 °F (-25…70 °C)
Ambient Air Temperature for Storage	-40…185 °F (-40…85 °C)
IP degree of protection	Front face IP69K IEC 60529 Back IP65 IEC 60529
Vibration resistance	2 mm 5…29.5 Hz)EN 60068-2-6 7 gn 29.5…150 Hz)EN 60068-2-6
Shock resistance	30 gn 11 ms EN 60068-2-27

The information provided in this documentation contains general descriptions and/or technical characteristics of the performance of the products contained herein.
This documentation is not intended as a substitute for and is not to be used for determining suitability or reliability of these products for specific user applications.
It is the duty of any such user or integrator to perform the appropriate and complete risk analysis, evaluation and testing of the products with respect to the relevant specific application or use thereof.
Neither Schneider Electric Industries SAS nor any of its affiliates or subsidiaries shall be responsible or liable for misuse of the information contained herein.

IK degree of protection	IK02 EN 50102
Electromagnetic compatibility	Electrostatic discharge immunity test 6 kV contact discharge) 3 IEC 61000-4-2 Electrostatic discharge immunity test 8 kV air discharge) 3 IEC 61000-4-2 Electrical fast transient/burst immunity test 1 kV signal ports) 3 IEC 61000-4-4 Electrical fast transient/burst immunity test 2 kV power ports) 3 IEC 61000-4-4 Susceptibility to electromagnetic fields 10 V/m3 IEC 61000-4-3 1.2/50 µs shock waves immunity test 10 kV3 IEC 61000-4-5 Conducted RF disturbances 10 V3 IEC 61000-4-6 Magnetic field at power frequency 30 A/m4 IEC 61000-4-8

Ordering and shipping details

Category	22491-SENS,IDENTIFICATION DEVICE (XGK)
Discount Schedule	DS2
GTIN	3389119632256
Returnability	No
Country of origin	FR

Packing Units

Unit Type of Package 1	PCE
Number of Units in Package 1	1
Package 1 Height	1.73 in (4.400 cm)
Package 1 Width	2.52 in (6.400 cm)
Package 1 Length	3.54 in (9.000 cm)
Package 1 Weight	2.61 oz (74.000 g)
Unit Type of Package 2	S01
Number of Units in Package 2	22
Package 2 Height	5.91 in (15.000 cm)
Package 2 Width	5.91 in (15.000 cm)
Package 2 Length	15.75 in (40.000 cm)
Package 2 Weight	3.97 lb(US) (1.801 kg)

Offer Sustainability

California proposition 65	WARNING: This product can expose you to chemicals including: Diisononyl phthalate (DINP), which is known to the State of California to cause cancer, and Di-isodecyl phthalate (DIDP), which is known to the State of California to cause birth defects or other reproductive harm. For more information go to www.P65Warnings.ca.gov
REACh Regulation	REACh Declaration
EU RoHS Directive	Pro-active compliance (Product out of EU RoHS legal scope) EU RoHS Declaration
Mercury free	Yes
RoHS exemption information	Yes

XGCS49LB201

Dimensions

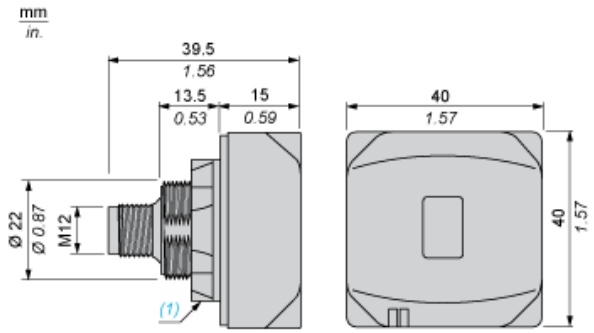

(1) Locking nut

Connections

Modbus Connections

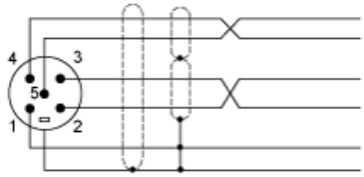

Pin no.	Modbus smart antenna signal
1	Drain (Modbus-SHLD)
2	+ 24 VDC
3	0 V/Modbus-GND
4	D0
5	D1

Connection Examples

Connection to a Terminal

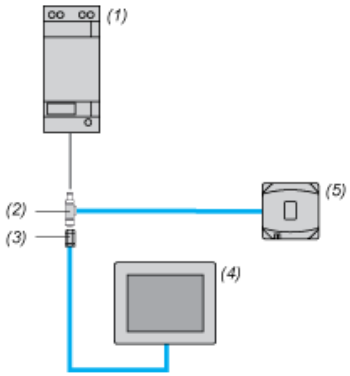

(1) Power supply
(2) Network Tee
(3) Male M12 connector
(4) Terminal
(5) Smart antenna

Connection to an Automation Platform

Daisy chain topology

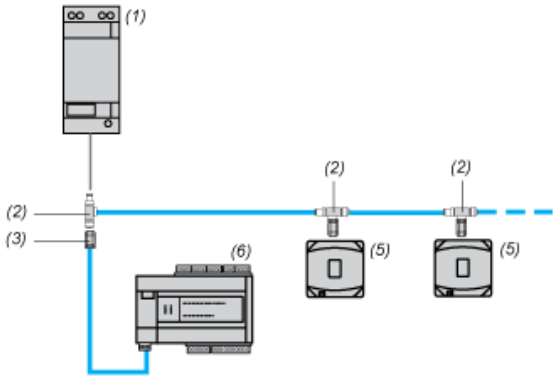

(1) Power supply
(2) Network Tee
(3) Male M12 connector
(4) Terminal
(5) Smart antenna
(6) Automation platform

Mounting and Clearance

Minimum Distance Between 2 Identical Smart Antennas According to their Positioning and Type of Tag Used

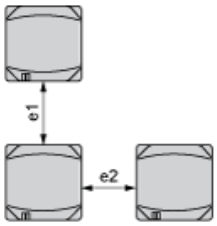

Dimensions in mm

Tag	e1	e2
XGHBPB3345	90	90
XGHB90E340	310	310
XGHB90E341	90	90

Dimensions in in.

Tag	e1	e2
XGHBPB3345	3.54	3.54
XGHB90E340	12.20	12.20
XGHB90E341	3.54	3.54