# Product data sheet
## Characteristics

# XS9C4A1NCN12
## Inductive proximity sensors XS, inductive sensor XS9 40x40x117, PBT, Sn20 mm, 12...24 VDC, terminals



## Main

| | |
|---|---|
| Range of Product | Telemecanique Inductive proximity sensors XS |
| Series name | General purpose |
| Sensor Type | Inductive proximity sensor |
| Device Application | Welding machine<br>Factor 1 (Fe/Nfe) |
| Sensor name | XS9 |
| Sensor design | Form 40 x 40 x 117 |
| Size | 117 mm |
| Body type | Fixed |
| Detector flush mounting acceptance | Flush mountable |
| Material | Plastic |
| Enclosure Material | PBT |
| Type of output signal | Discrete |
| Wiring Technique | 4-wire |
| [Sn] nominal sensing distance | 0.79 in (20 mm) |
| Discrete output function | 1 NO + 1 NC |
| Output circuit type | DC |
| Discrete output type | NPN |
| Electrical connection | Screw-clamp terminals, 4 x 1.5 mm² |
| [Us] rated supply voltage | 12...24 V DC reverse polarity protection |
| Switching capacity in mA | <= 200 mA overload and short-circuit protection |
| IP degree of protection | IP67 conforming to IEC 60529<br>IP65 conforming to IEC 60529<br>IP69K conforming to DIN 40050 |

## Complementary

| | |
|---|---|
| Detection face | 5 positions turret head |
| Front material | PBT |
| Operating zone | 0.00…0.63 in (0…16 mm) |
| Differential travel | 3...15% of Sr |
| Repeat accuracy | <= 3% of Sr |
| Electromagnetic compatibility | Immunity to magnetic fields - test level: 250 mT |
| Cable entry number | 1 tapped entry 1/2" NPT cable gland |
| Status LED | Supply on 1 LED green)<br>Output state 1 LED yellow) |
| Supply voltage limits | 10…36 V DC |
| Switching frequency | <= 250 Hz |
| Maximum voltage drop | <2 V closed) |
| Current consumption | 0...30 mA no-load |
| Maximum delay first up | 15 ms |
| Maximum delay response | 2.5 ms |
| Maximum delay recovery | 2.5 ms |
| Marking | CE |

The information provided in this documentation contains general descriptions and/or technical characteristics of the performance of the products contained herein.
This documentation is not intended as a substitute for and is not to be used for determining suitability or reliability of these products for specific user applications.
It is the duty of any such user or integrator to perform the appropriate and complete risk analysis, evaluation and testing of the products with respect to the relevant specific application or use thereof.
Neither Schneider Electric Industries SAS nor any of its affiliates or subsidiaries shall be responsible or liable for misuse of the information contained herein.

| | |
|---|---|
| Height | 1.57 in (40 mm) |
| Length | 1.57 in (40 mm) |
| Width | 4.61 in (117 mm) |
| Net Weight | 0.54 lb(US) (0.244 kg) |

## Environment

| | |
|---|---|
| Product Certifications | CSA<br>UL |
| Ambient Air Temperature for Operation | -13…158 °F (-25…70 °C) |
| Ambient Air Temperature for Storage | -40…185 °F (-40…85 °C) |
| Vibration resistance | 25 gn +/- 2 mm 10…55 Hz)IEC 60068-2-6 |
| Shock resistance | 50 gn 11 msEN 60068-2-27 |

## Ordering and shipping details

| | |
|---|---|
| Category | 22486-SENSORS, PROXIMITY |
| Discount Schedule | DS2 |
| GTIN | 3389119086486 |
| Returnability | No |

## Packing Units

| | |
|---|---|
| Unit Type of Package 1 | PCE |
| Number of Units in Package 1 | 1 |
| Package 1 Height | 5.91 in (15 cm) |
| Package 1 Width | 1.97 in (5 cm) |
| Package 1 Length | 1.97 in (5 cm) |
| Package 1 Weight | 8.61 oz (244 g) |

## Offer Sustainability

| | |
|---|---|
| Sustainable offer status | Green Premium product |
| California proposition 65 | WARNING: This product can expose you to chemicals including: Diisononyl phthalate (DINP), which is known to the State of California to cause cancer, and Di-isodecyl phthalate (DIDP), which is known to the State of California to cause birth defects or other reproductive harm. For more information go to www.P65Warnings.ca.gov |
| EU RoHS Directive | Pro-active compliance (Product out of EU RoHS legal scope) EU RoHS Declaration |
| Mercury free | Yes |
| RoHS exemption information | Yes |
| Environmental Disclosure | Product Environmental Profile |

## Contractual warranty

| | |
|---|---|
| Warranty | 18 months |

## Dimensions

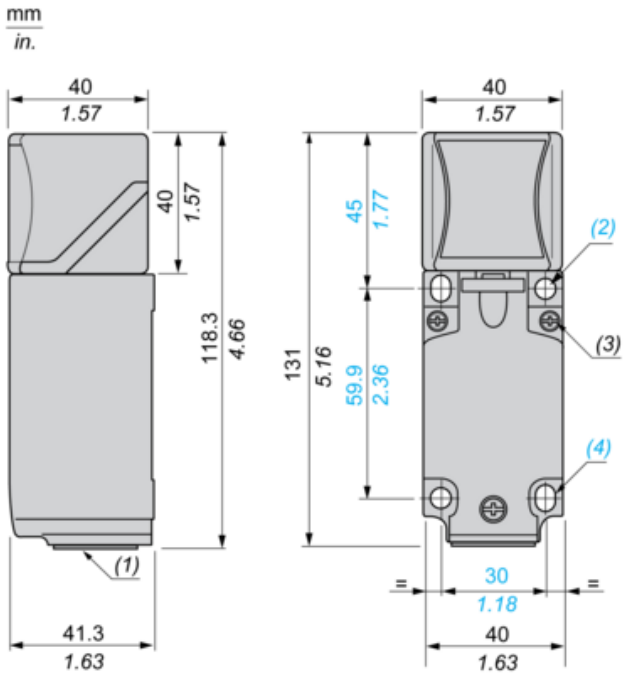


(1) : 1/2" NPT cable gland.

(2) : 2 holes Ø 5,45 mm / Ø 0.21 in. Tightening torque: < 1,5 Nm / < 13.3 lb-in.

(3) : 3 screws M3,5. Tightening torque: < 1,2 Nm / < 10.6 lb-in.

(4) : 2 alongated holes 5,4 x 7,4 mm / 0.21 x 0.29 in. Tightening torque: < 1,5 Nm / < 13.3 lb-in".

## Mounting

### Head Positions

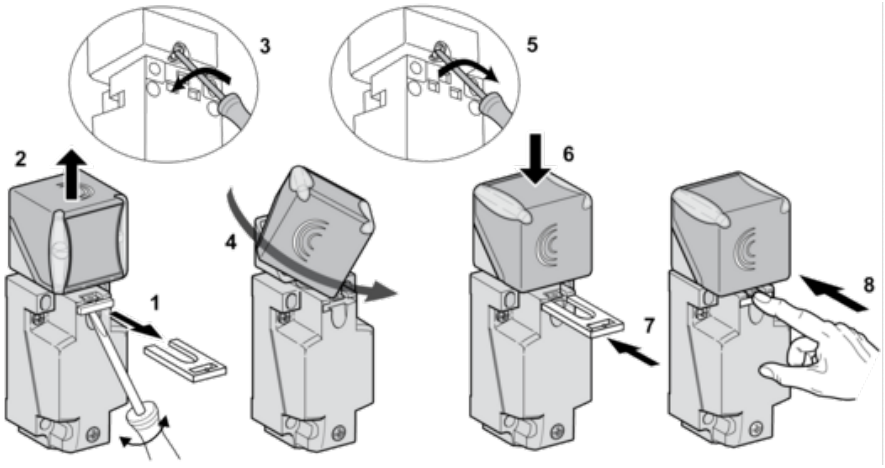


## Setting-up

### Sensing Distance Correction Factor

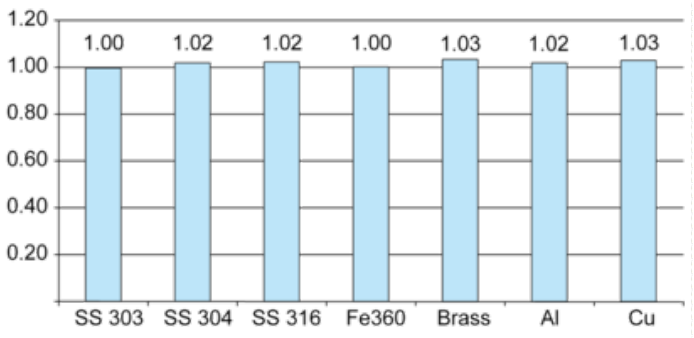


SS : Stainless steel
Fe : Steel
Al : Aluminium
Cu : Copper

## Setting-up

### Operating Distance (According to the Sensor's Level of Flush Mounting)

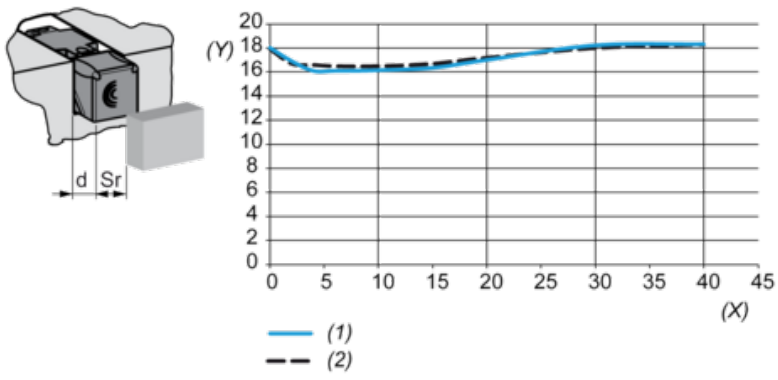

(y) Sensing distance (Sr) mm
(x) Sensing face/frame distance (d) mm
(1) Flush mounted in aluminium
(2) Flush mounted in Fe360

## Wiring Schemes

### 4-Wire DC

