Product data sheet
Characteristics

XMLR010G1P76
Electronic pressure sensors, Pressure sensors XM, XMLR 10 bar, 1/4" 18 NPT, 24 VDC, 0...10 V, PNP, M12



Main

Range of Product	Telemecanique Pressure sensors XM
Product or Component Type	Electronic pressure sensors
Pressure sensor type	Pressure transmitter
Pressure switch type of operation	Pressure transmitter with 1 switching output
Device short name	XMLR
Pressure Rating	145 Psi (999.74 kPa) 145.04 psi (10 bar)
Maximum permissible accidental pressure	580 Psi (3998.96 kPa) 580.15 Psi (40 bar) 4 MPa
Destruction pressure	580 Psi (3998.96 kPa) 580.15 Psi (40 bar) 4 MPa
Controlled fluid	Fresh water 32…176 °F (0…80 °C)) Air -4…176 °F (-20…80 °C)) Hydraulic oil -4…176 °F (-20…80 °C)) Refrigeration fluid -4…176 °F (-20…80 °C))
Fluid connection type	1/4" - 18 NPT (female)
[Us] rated supply voltage	24 V DC SELV 17…33 V)

Complementary

Current Consumption	<= 50 mA
Electrical connection	Male connector M12, 4 pins
Analogue output function	0...10 V
Type of output signal	Analogue + discrete
Analogue output function	0...10 V
Discrete output type	Solid state PNP, NO/NC programmable
Maximum switching current	250 mA
Contacts type and composition	NO/NC programmable
Scale type	Fixed differential
Maximum voltage drop	2 V
Adjustable range of switching point on rising pressure	11.6…145 Psi (79.98…999.74 kPa) 11.60…145.04 Psi (0.8…10 bar) 0.08…1 MPa
Adjustable range of switching point on falling pressure	7.25…140.69 Psi (0.5…9.7 bar) 7.25…141 Psi (49.99…972.16 kPa) 0.05…0.97 MPa
Minimum differential travel	4.35 Psi (29.99 kPa) 4.35 Psi (30 kPa) 4.35 psi (0.3 bar)
Materials in contact with fluid	Fluorocarbon FKM (Viton) 316L stainless steel Ceramic
Front material	Polyester
Housing material	316L stainless steel Polyacrylamide
Operating position	Any position, but disposals can falsified the measurement in case of upside down mounting

The information provided in this documentation contains general descriptions and/or technical characteristics of the performance of the products contained herein.
This documentation is not intended as a substitute for and is not to be used for determining suitability or reliability of these products for specific user applications.
It is the duty of any such user or integrator to perform the appropriate and complete risk analysis, evaluation and testing of the products with respect to the relevant specific application or use thereof.
Neither Schneider Electric Industries SAS nor any of its affiliates or subsidiaries shall be responsible or liable for misuse of the information contained herein.

Protection Type	Overload protection Overvoltage protection Reverse polarity Short-circuit protection
Response time on output	<= 10 ms analog output <= 5 ms discrete output
Switching output time delay	0...50 s in steps of 1 second
Display Type	4 digits 7 segments
Local signalling	For light ON when switch is actuated 1 LED (yellow)
Display response time type	Fast 50 ms Normal 200 ms Slow 600 ms
Maximum delay first up	300 ms
Overall accuracy	<= 1 % of the measuring range
Linearity error on analogue output	<= 0.5 % of the measuring range
Hysteresis on analogue output	<= 0.2 % of the measuring range
Measurement accuracy on switching output	<= 0.6 % of the measuring range
Repeat accuracy	<= 0.2 % of the measuring range
Drift of the sensitivity	+/- 0.03 % of measuring range/°C
Drift of the zero point	+/- 0.1 % of measuring range/°C
Display accuracy	<= 1 % of the measuring range
Mechanical durability	10000000 cycles
Depth	1.65 in (42 mm)
Height	3.94 in (100 mm)
Width	1.61 in (41 mm)
Net Weight	0.47 lb(US) (0.212 kg)
[Uimp] rated impulse withstand voltage	0.5 kV DC
Electromagnetic compatibility	Susceptibility to electromagnetic fields 10 V/m 80...2000 MHz EN/IEC 61000-4-3 Immunity to conducted RF disturbances 10 V 0.15...80 MHz EN/IEC 61000-4-6 Surge immunity test 1 kV EN/IEC 61000-4-5 Electrical fast transient/burst immunity test 2 kV EN/IEC 61000-4-4 Electrostatic discharge immunity test 8 kV air, 4 kV contact EN/IEC 61000-4-2

Environment

Marking	CE
Product Certifications	cULus[RETURN]EAC
Standards	UL 61010-1 EN/IEC 61326-2-3
Ambient Air Temperature for Operation	-4…176 °F (-20…80 °C)
Ambient Air Temperature for Storage	-40…176 °F (-40…80 °C)
IP degree of protection	IP65 conforming to EN/IEC 60529 IP67 conforming to EN/IEC 60529
Vibration resistance	20 gn 10…2000 Hz)EN/IEC 60068-2-6
Shock resistance	50 gn EN/IEC 60068-2-27

Ordering and shipping details

Category	21551-XMLE,XMLF,XMLG PRESSURE SENSORS
Discount Schedule	DS2
GTIN	3389119610636
Returnability	No
Country of origin	CH

Packing Units

Unit Type of Package 1	PCE
Number of Units in Package 1	1
Package 1 Height	2.56 in (6.5 cm)
Package 1 Width	2.95 in (7.5 cm)
Package 1 Length	5.00 in (12.7 cm)
Package 1 Weight	6.38 oz (181.0 g)

Offer Sustainability

California proposition 65	WARNING: This product can expose you to chemicals including: Diisononyl phthalate (DINP), which is known to the State of California to cause cancer, and Di-isodecyl phthalate (DIDP), which is known to the State of California to cause birth defects or other reproductive harm. For more information go to www.P65Warnings.ca.gov
REACh Regulation	REACh Declaration
REACh free of SVHC	Yes
EU RoHS Directive	Pro-active compliance (Product out of EU RoHS legal scope) EU RoHS Declaration
Mercury free	Yes
RoHS exemption information	Yes

Dimensions

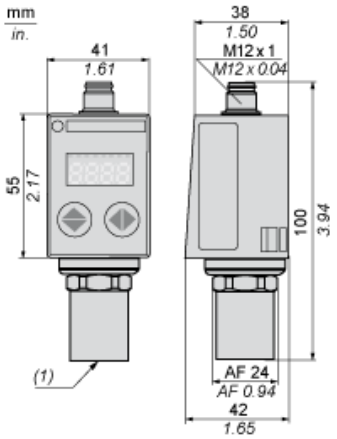

(1) Fluid entry: 1/4”-18NPT female

Connections and Schema

Connector Wiring

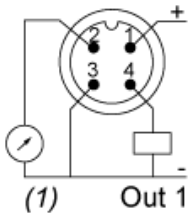

(1) I Out or V Out

Analogue Output Description

Analogue Output Signal

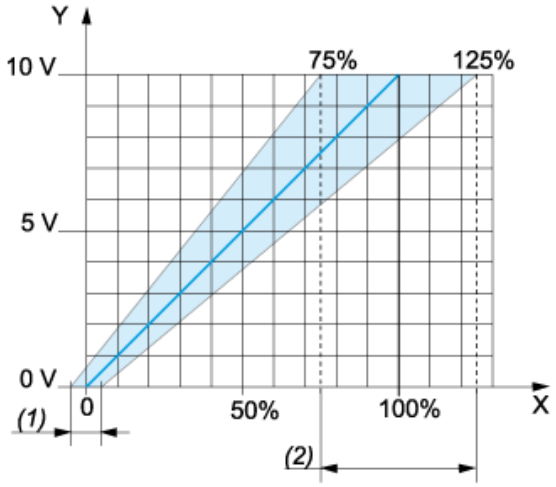

X : Pressure
Y : Analogue output signal
(1) An offset of +/-5% of nominal pressure can be compensated (with Cof Configuration menu. Cof: Offset Compensation)
(2) The Analogue curve can be adjusted from -25% to +25% of nominal pressure (with AEP Configuration menu. AEP: analogue end point).

Switching Output Description. Hysteresis Mode

The hysteresis switching mode is typically used for the “pumping and/or emptying applications”.

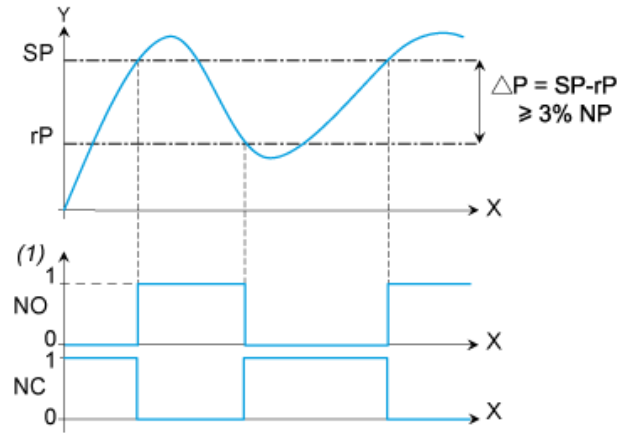

X : Time
Y : Pressure
(1) Output
NP : Nominal Pressure
SP : Set point (adjustable from 8 % to 100 % NP)
rP : Reset point (adjustable from 5 % to 97 % NP)

Switching Output Description. Window Mode

The window switching mode is typically used for the “pressure regulation applications”

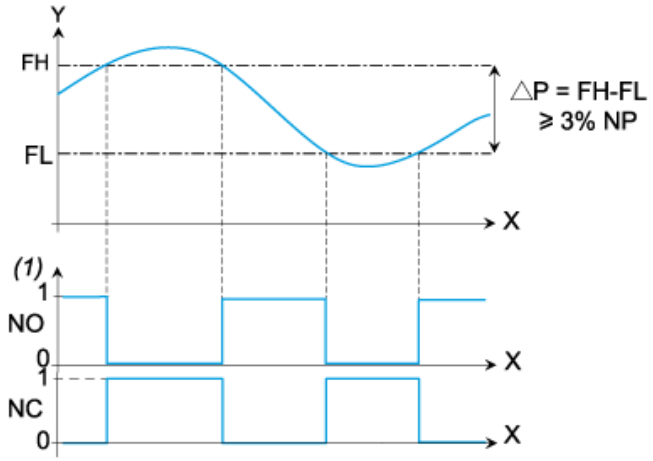

X : Time
Y : Pressure
(1) Output
NP : Nominal pressure
FH : High switching point (adjustable from 8 % to 100 % NP)
FL : Low switching point (adjustable from 5 % to 97 % NP)

Switching Output Description. Time Delay

The Time Delay is typically used to filter out the fast pressure transients.

The output only switches after a time “dS” and “dr” adjustable from 0 to 50 seconds.

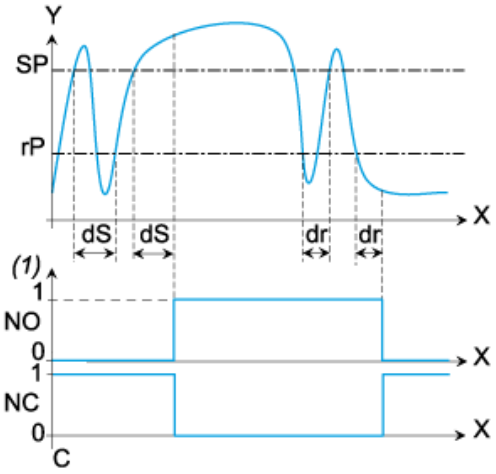

X : Time
Y : Pressure
(1) Output
SP : Set point
rP : Reset point
dS : Time delay on the set point
dr : Time delay on the reset point