Product data sheet
Characteristics

XZCP1241L25
Pre wired connectors XZ, elbowed female, M12, 4 pins, cable PUR 25 m



Main

Range of Product	Telemecanique Cabling components
Accessory / separate part category	Cabling accessory
Accessory / separate part type	Pre-wired connectors
Series name	General purpose

Complementary

Electrical connection	Elbowed female connector M12, 4 pins
Cable connector fixing	Screw-on
Collar material	Metal
Status LED	Without
Cable length	82.02 ft (25 m)
Cable outer diameter	0.20 in (5.2 mm)
Cable composition	4 x 0.34 mm²
Wire insulation material	PUR
[Ue] rated operational voltage	250 V AC 300 V DC
Line Rated Current	4 A
Contact resistance	5000 µOhm
Minimum insulating resistance	1 GΩ

Environment

IP Degree of Protection	IP67 IP69K IP65
Product Certifications	cULus
Ambient air temperature for operation	-40…176 °F (-40…80 °C) static 23…176 °F (-5…80 °C) flexing
Ambient Air Temperature for Storage	-40…176 °F (-40…80 °C)

Ordering and shipping details

Category	22483-MACHINE CABLES
Discount Schedule	DS3
GTIN	3389110368727
Returnability	No
Country of origin	CZ

The information provided in this documentation contains general descriptions and/or technical characteristics of the performance of the products contained herein.
This documentation is not intended as a substitute for and is not to be used for determining suitability or reliability of these products for specific user applications.
It is the duty of any such user or integrator to perform the appropriate and complete risk analysis, evaluation and testing of the products with respect to the relevant specific application or use thereof.
Neither Schneider Electric Industries SAS nor any of its affiliates or subsidiaries shall be responsible or liable for misuse of the information contained herein.

Packing Units

Unit Type of Package 1	PCE
Number of Units in Package 1	1
Package 1 Height	2.28 in (5.800 cm)
Package 1 Width	8.11 in (20.600 cm)
Package 1 Length	8.58 in (21.800 cm)
Package 1 Weight	25.22 oz (715.000 g)
Unit Type of Package 2	S02
Number of Units in Package 2	5
Package 2 Height	5.91 in (15.000 cm)
Package 2 Width	11.81 in (30.000 cm)
Package 2 Length	15.75 in (40.000 cm)
Package 2 Weight	8.62 lb(US) (3.909 kg)
Unit Type of Package 3	P06
Number of Units in Package 3	80
Package 3 Height	30.31 in (77.000 cm)
Package 3 Width	31.50 in (80.000 cm)
Package 3 Length	23.62 in (60.000 cm)
Package 3 Weight	169.71 lb(US) (76.980 kg)

Offer Sustainability

Sustainable offer status	Green Premium product
California proposition 65	WARNING: This product can expose you to chemicals including: Diisononyl phthalate (DINP), which is known to the State of California to cause cancer, and Di-isodecyl phthalate (DIDP), which is known to the State of California to cause birth defects or other reproductive harm. For more information go to www.P65Warnings.ca.gov
REACh Regulation	REACh Declaration
EU RoHS Directive	Pro-active compliance (Product out of EU RoHS legal scope) EU RoHS Declaration
Mercury free	Yes
RoHS exemption information	Yes
Environmental Disclosure	Product Environmental Profile
Circularity Profile	End Of Life Information

Contractual warranty

Warranty	18 months

XZCP1241L25

Dimensions

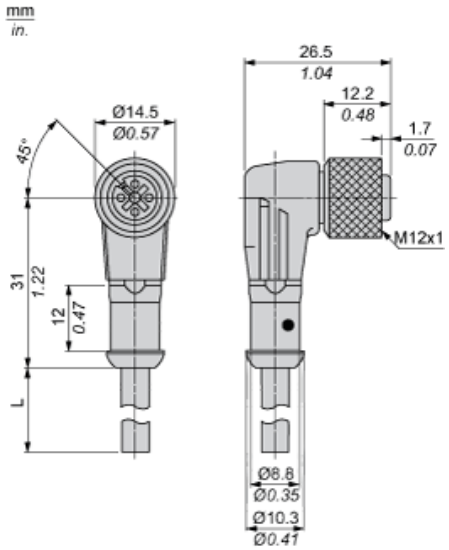

L : Lenght of cable

Connections and Schemes

Connector

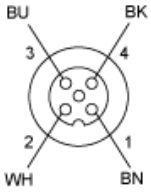

BN : Brown
BK : Black
BU : Blue
WH : White