Product data sheet
Characteristics

XUK5LAPSMM12
Photoelectric sensors XU, photo electric laser sensor, XUK, diffuse energetic, Sn 1,2 m, 10...30 VDC, M12



Main

Range of Product	Telemecanique Photoelectric sensors XU
Series name	Application material handling Application assembly
Electronic sensor type	Photo-electric sensor
Sensor name	XUK
Sensor design	Compact 50 x 50
Detection system	Diffuse
Material	Plastic
Type of output signal	Discrete
Supply circuit type	DC
Wiring Technique	4-wire
Discrete output type	PNP
Discrete output function	1 NO or 1 NC programmable
Electrical connection	1 male connector M12, 4 pins
Product Specific Application	-
Emission	Red laser diffuse class 1
[Sn] nominal sensing distance	3.94 ft (1.2 m) diffuse

Complementary

Enclosure Material	ABS/PC
Lens material	PMMA
Maximum sensing distance	3.94 ft (1.2 m) diffuse
Output Type	Solid state
Cable composition	3 x 0.34 mm²
Wire insulation material	PVC
Cable outer diameter	0.24 in (6 mm)
Status LED	1 LED yellow)output state 1 LED green/yellow)supply on/output state
[Us] rated supply voltage	12...24 V DC reverse polarity protection
Supply voltage limits	10…36 V DC
Switching capacity in mA	<= 100 mA overload and short-circuit protection)
Switching frequency	<= 250 Hz
Maximum voltage drop	<1.5 V closed state)
Current consumption	<= 30 mA no-load
Maximum delay first up	300 ms
Maximum delay response	0.8 ms
Maximum delay recovery	0.8 ms
Setting-up	Using teach button or remote teaching
Depth	1.97 in (50 mm)
Height	1.97 in (50 mm)
Width	0.91 in (23 mm)
Net Weight	0.08 lb(US) (0.035 kg)

The information provided in this documentation contains general descriptions and/or technical characteristics of the performance of the products contained herein.
This documentation is not intended as a substitute for and is not to be used for determining suitability or reliability of these products for specific user applications.
It is the duty of any such user or integrator to perform the appropriate and complete risk analysis, evaluation and testing of the products with respect to the relevant specific application or use thereof.
Neither Schneider Electric Industries SAS nor any of its affiliates or subsidiaries shall be responsible or liable for misuse of the information contained herein.

Environment

Product Certifications	Ecolab CE cULus
Ambient air temperature for operation	-4…140 °F (-20…60 °C) -4…122 °F (-20…50 °C), UL
Ambient Air Temperature for Storage	-4…176 °F (-20…80 °C)
Vibration resistance	7 gn 10…55 Hz) IEC 60068-2-6
Shock resistance	10 gn 11 ms) IEC 60068-2-27
IP degree of protection	IP67 IEC 60529 IP69K DIN 40050

Ordering and shipping details

Category	22481-SENSORS, PHOTOELECTRIC
Discount Schedule	DS2
GTIN	3389119077576
Returnability	No
Country of origin	DE

Packing Units

Unit Type of Package 1	PCE
Number of Units in Package 1	1
Package 1 Height	1.61 in (4.1 cm)
Package 1 Width	2.52 in (6.4 cm)
Package 1 Length	3.70 in (9.4 cm)
Package 1 Weight	1.69 oz (48.0 g)
Unit Type of Package 2	S01
Number of Units in Package 2	28
Package 2 Height	5.91 in (15.0 cm)
Package 2 Width	5.91 in (15.0 cm)
Package 2 Length	15.75 in (40.0 cm)
Package 2 Weight	3.47 lb(US) (1.572 kg)

Offer Sustainability

California proposition 65	WARNING: This product can expose you to chemicals including: Diisononyl phthalate (DINP), which is known to the State of California to cause cancer, and Di-isodecyl phthalate (DIDP), which is known to the State of California to cause birth defects or other reproductive harm. For more information go to www.P65Warnings.ca.gov
REACh Regulation	REACh Declaration
EU RoHS Directive	Pro-active compliance (Product out of EU RoHS legal scope) EU RoHS Declaration
Mercury free	Yes
RoHS exemption information	Yes

Contractual warranty

Warranty	18 months

XUK5LAPSMM12

Dimensions

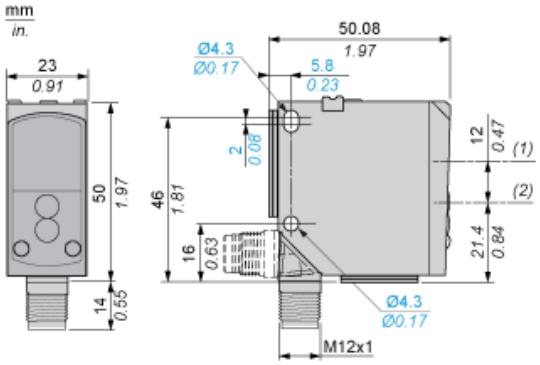

(1) Receiver optical axis
(2) Transmitter optical axis

Wiring Schemes Using M12 Connector

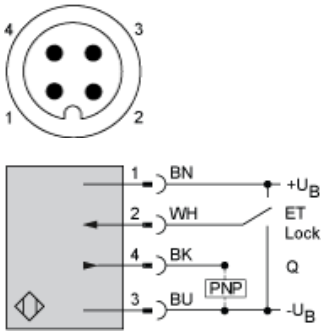

1 : (+)
2 : ET/Lock (1)
3 : (-)
4 : Output
BN : Brown
WH : White
BU : Blue
BK : Black
+UB :External teach
-UB : Pushbutton locking
(1) ET/Lock. ET: External Teach, Lock: Pushbutton locking

Curves

Excess Gain Curve

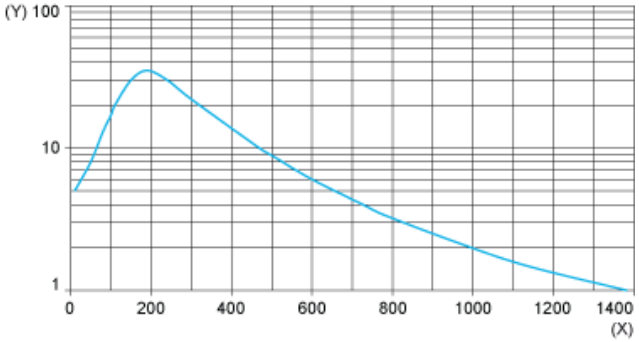

(X) Distance (mm)
(Y) Gain

Size of Luminous Point

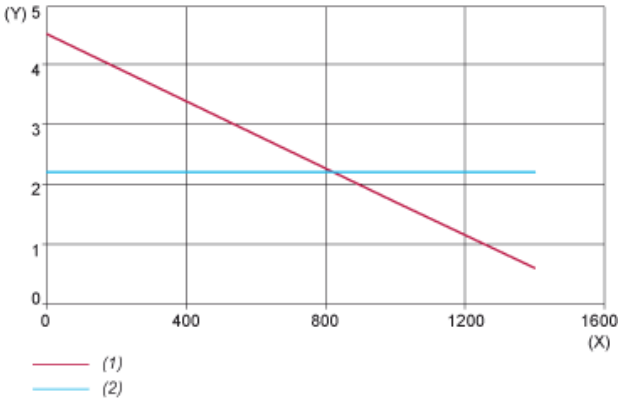

(X) Distance (mm)
(Y) Size (mm)
(1) Vertical (Y)
(2) Horizontal (X)