Product data sheet
Characteristics

XUVA0505PANM8
Photoelectric sensors XU, XUV, fork, 50 mm, 12...24 VDC, M8



Main

Range of Product	Telemecanique Photoelectric sensors XU
Series name	General purpose
Electronic sensor type	Photo-electric sensor
Sensor name	XUVA
Sensor design	Fork L
Detection system	Thru beam
Emission	Red LED, modulated
Passage width	1.97 in (50 mm)
Passage depth	1.97 in (50 mm)
Material	Metal/plastic
Supply circuit type	DC
Wiring Technique	3-wire
Discrete output type	PNP
Discrete output function	1 NO
Electrical connection	1 male connector M8, 3 pins
Product Specific Application	Detection on small conveyor
[Sn] nominal sensing distance	1.97 in (50 mm)

Complementary

Enclosure Material	Painted aluminium and polyamide/glass
Spot diameter	0.05 in (1.2 mm)
Type of output signal	Discrete
Output Type	Solid state
Status LED	Output state 1 LED yellow)
[Us] rated supply voltage	12...24 V DC reverse polarity protection
Supply voltage limits	10…30 V DC
Switching capacity in mA	100 mA overload and short-circuit protection)
Switching frequency	4000 Hz
Maximum voltage drop	<1.5 V closed state)
Current consumption	< 20 mA no-load
Net Weight	0.42 lb(US) (0.19 kg)

Environment

Product Certifications	CE
Ambient Air Temperature for Operation	14…140 °F (-10…60 °C)
Ambient Air Temperature for Storage	-40…176 °F (-40…80 °C)
Immunity to ambient light	10000 Lux natural light 5000 lux incandescent bulb
Vibration resistance	7 gn +/- 0.75 mm 10…55 Hz) IEC 60068-2-6
Shock resistance	30 gn 11 ms) IEC 60068-2-27
IP degree of protection	IP65 IP67

The information provided in this documentation contains general descriptions and/or technical characteristics of the performance of the products contained herein.
This documentation is not intended as a substitute for and is not to be used for determining suitability or reliability of these products for specific user applications.
It is the duty of any such user or integrator to perform the appropriate and complete risk analysis, evaluation and testing of the products with respect to the relevant specific application or use thereof.
Neither Schneider Electric Industries SAS nor any of its affiliates or subsidiaries shall be responsible or liable for misuse of the information contained herein.

Ordering and shipping details

Category	22481-SENSORS, PHOTOELECTRIC
Discount Schedule	DS2
GTIN	3389119052351
Returnability	No
Country of origin	FR

Packing Units

Unit Type of Package 1	PCE
Number of Units in Package 1	1
Package 1 Height	0.79 in (2.000 cm)
Package 1 Width	5.31 in (13.500 cm)
Package 1 Length	6.50 in (16.500 cm)
Package 1 Weight	2.33 oz (66.000 g)

Offer Sustainability

California proposition 65	WARNING: This product can expose you to chemicals including: Diisononyl phthalate (DINP), which is known to the State of California to cause cancer, and Di-isodecyl phthalate (DIDP), which is known to the State of California to cause birth defects or other reproductive harm. For more information go to www.P65Warnings.ca.gov
REACh Regulation	REACh Declaration
EU RoHS Directive	Pro-active compliance (Product out of EU RoHS legal scope) EU RoHS Declaration
Mercury free	Yes
RoHS exemption information	Yes

Contractual warranty

Warranty	18 months

Dimensions

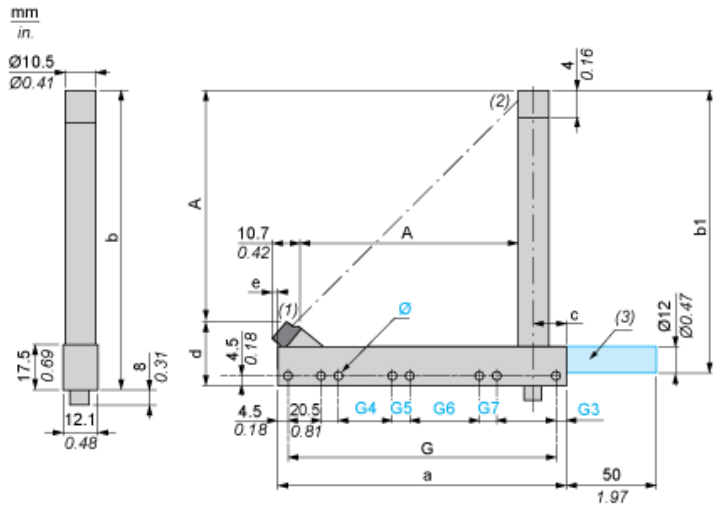

(1) Transmission LED
(2) Yellow LED: output signal
(3) Optional fixing rod available on request. Please consult our Customer Care Centre

Dimensions in mm

Depth A	a	b	b1	G	G3	∅	G4	G5	G6	G7	c
44.3	75	83	75	66	4.5	4 x 4.3	-	-	-	-	14.75

Dimensions in in.

Depth A	a	b	b1	G	G3	∅	G4	G5	G6	G7	c
1.74	2.95	3.27	2.95	2.60	0.18	0.16 x 0.17	-	-	-	-	0.58

Wiring Schemes

M8 Connector

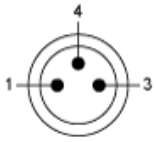

1 : BN: Brown
3 : BU: Blue
4 : BK: Black

PNP Output

