Product data sheet
Characteristics

XS630B2NAL01M12
Inductive proximity sensors XS, inductive sensor XS6 M30, L63mm, brass, Sn18mm, 12...24 VDC, M12 0.15 m



Main

Range of Product	Telemecanique Inductive proximity sensors XS
Series name	Application
Sensor Type	Inductive proximity sensor
Type of sensing window	Adjustable
Sensor name	XS6
Sensor design	Cylindrical M30
Size	63 mm
Body type	Fixed
Detector flush mounting acceptance	Non flush mountable
Material	Metal
Type of output signal	Discrete
Wiring Technique	3-wire
[Sn] nominal sensing distance	0.43 In (11 mm) flush mountable 0.71 in (18 mm) non flush mountable
Discrete output function	1 NO
Output circuit type	DC
Discrete output type	NPN
Electrical connection	Remote male connector M12, 4 pins
Cable length	0.49 ft (0.15 m)
[Us] rated supply voltage	12...24 V DC reverse polarity protection
Switching capacity in mA	<= 100 mA DC overload and short-circuit protection
IP degree of protection	IP67 double insulation conforming to IEC 60529 IP69K conforming to DIN 40050

Complementary

Thread type	M30 x 1.5
Detection face	Frontal
Front material	PPS
Enclosure Material	Nickel Plated Brass
Sensing range	> 0.59...1.57 in (> 15...40 mm)
Fine adjustment zone	0.24…0.43 In (6…11 mm) flush mountable 0.24…0.71 in (6…18 mm) non flush mountable
Differential travel	1...15% of Sr
Cable composition	3 x 0.34 mm²
Wire insulation material	PVC
Status LED	Supply on and teach mode 1 LED green) Output state 1 LED yellow)
Supply voltage limits	10…36 V DC
Switching frequency	<= 1000 Hz
Maximum voltage drop	<2 V closed)
Current consumption	<= 10 mA no-load
Maximum delay first up	10 ms
Maximum delay response	0.3 ms
Maximum delay recovery	0.7 ms
Marking	CE

The information provided in this documentation contains general descriptions and/or technical characteristics of the performance of the products contained herein.
This documentation is not intended as a substitute for and is not to be used for determining suitability or reliability of these products for specific user applications.
It is the duty of any such user or integrator to perform the appropriate and complete risk analysis, evaluation and testing of the products with respect to the relevant specific application or use thereof.
Neither Schneider Electric Industries SAS nor any of its affiliates or subsidiaries shall be responsible or liable for misuse of the information contained herein.

Threaded length	1.61 in (41 mm)
Length	2.48 in (63 mm)
Net Weight	0.49 lb(US) (0.22 kg)

Environment

Product Certifications	CSA UL
Ambient Air Temperature for Operation	-13…158 °F (-25…70 °C)
Ambient Air Temperature for Storage	-40…185 °F (-40…85 °C)
Vibration resistance	25 gn +/- 2 mm 10…55 Hz)IEC 60068-2-6
Shock resistance	50 gn 11 ms IEC 60068-2-27

Ordering and shipping details

Category	22486-SENSORS, PROXIMITY
Discount Schedule	DS2
GTIN	3389110148077
Returnability	No

Packing Units

Unit Type of Package 1	PCE
Number of Units in Package 1	1

Offer Sustainability

California proposition 65	WARNING: This product can expose you to chemicals including: Diisononyl phthalate (DINP), which is known to the State of California to cause cancer, and Di-isodecyl phthalate (DIDP), which is known to the State of California to cause birth defects or other reproductive harm. For more information go to www.P65Warnings.ca.gov
EU RoHS Directive	Not applicable, out of EU RoHS legal scope
Environmental Disclosure	Product Environmental Profile
Circularity Profile	End Of Life Information

Contractual warranty

Warranty	18 months

XS630B2NAL01M12

Dimensions

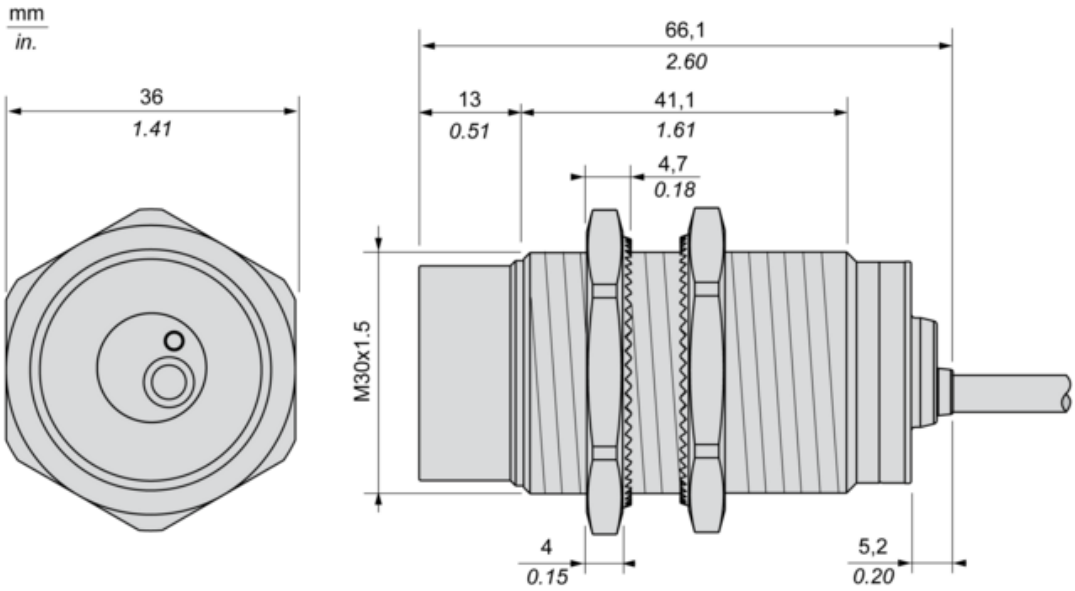

XS630B2NAL01M12

Minimum Mounting Distances in mm

Side by side

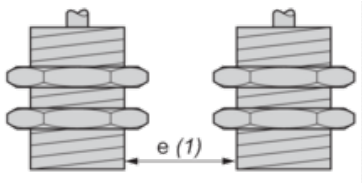

e (1) ≥ 48 mm/1.89 in.

Face to face

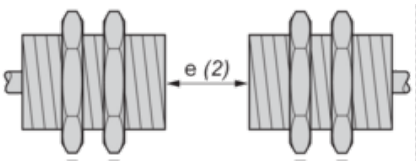

e (2) ≥ 180 mm/7.09 in.

Facing a metal object

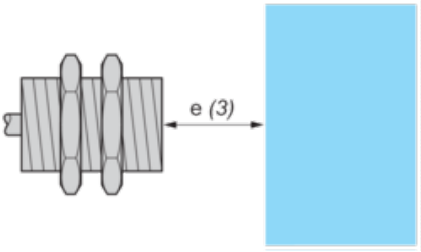

e (3) ≥ 11 mm/0.43 in.

Wiring Schemes

M12 connector

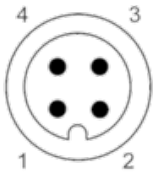

NPN

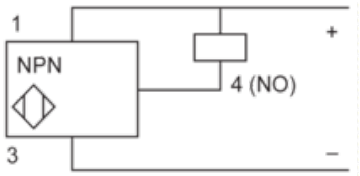

1 : (+)
2 : Not connected
3 : (-)
4 : NO Output