Product data sheet
Characteristics

XCKJ10541H7
Limit switch, XC Standard, XCKJ, thermoplastic plastic roller lever var length, 1NC+1 NO, snap, 1/2NPT



Main

Range of Product	Telemecanique Limit switches XC Standard
Series name	Standard format
Product or Component Type	Limit switch
Device short name	XCKJ
Sensor design	-
Body type	Fixed
Head type	Rotary head
Material	Metal
Body material	Zamak
Head material	Zamak
Fixing Mode	By the body
Movement of operating head	Rotary
Type of operator	Spring return roller lever thermoplastic variable length
Type of approach	Lateral approach, 1 or 2 programmable direction
Cable entry	1 entry tapped for 1/2" NPT cable gland
Number of poles	2
Contacts type and composition	1 NC + 1 NO
Contact operation	Snap action

Complementary

Switch actuation	By 30° cam
Electrical connection	Screw-clamp terminals 1 x 0.34...2 x 1.5 mm²
Contacts insulation form	Zb
Number of steps	1
Positive opening	Without
Minimum torque for tripping	2.21 lbf.in (0.25 N.m)
Maximum actuation speed	4.92 ft/s (1.5 m/s)
[Ie] rated operational current	3 A 240 V, AC-15, A300 EN/IEC 60947-5-1 appendix A 0.27 A 250 V, DC-13, Q300 EN/IEC 60947-5-1 appendix A
[Ithe] conventional enclosed thermal current	10 A
[Ui] rated insulation voltage	300 VUL 508 500 V 3)IEC 60947-1 300 VCSA C22.2 No 14
Maximum resistance across terminals	25 MOhm IEC 60255-7 category 3
[Uimp] rated impulse withstand voltage	6 KV IEC 60664 6 kV IEC 60947-1
Short-circuit protection	10 A cartridge fuse gG
Electrical durability	5000000 Cycles, DC-13, inductive, 120 V, 4 W 60 cyc/mn 0.5 IEC 60947-5-1 appendix C 5000000 Cycles, DC-13, inductive, 24 V, 10 W 60 cyc/mn 0.5 IEC 60947-5-1 appendix C 5000000 cycles, DC-13, inductive, 48 V, 7 W 60 cyc/mn 0.5 IEC 60947-5-1 appendix C
Mechanical durability	30000000 cycles
Width	1.57 in (40 mm)

The information provided in this documentation contains general descriptions and/or technical characteristics of the performance of the products contained herein.
This documentation is not intended as a substitute for and is not to be used for determining suitability or reliability of these products for specific user applications.
It is the duty of any such user or integrator to perform the appropriate and complete risk analysis, evaluation and testing of the products with respect to the relevant specific application or use thereof.
Neither Schneider Electric Industries SAS nor any of its affiliates or subsidiaries shall be responsible or liable for misuse of the information contained herein.

Height	3.03 in (77 mm)
Depth	1.73 in (44 mm)
Net Weight	1.07 lb(US) (0.485 kg)
Terminals description ISO n°1	(21-22)NC (13-14)NO

Environment

Shock resistance	50 gn 11 ms IEC 60068-2-27
Vibration resistance	25 gn 10…500 Hz)IEC 60068-2-6
IP degree of protection	IP66 conforming to IEC 60529
IK degree of protection	IK07 EN 50102
Overvoltage category	Class I IEC 61140 Class I NF C 20-030
Ambient Air Temperature for Operation	-13…158 °F (-25…70 °C)
Ambient Air Temperature for Storage	-40…158 °F (-40…70 °C)
Protective treatment	TH
Product Certifications	CSA UL CCC
Standards	CSA C22.2 No 14 IEC 60947-5-1 IEC 60204-1 CENELEC EN 50041 EN 60204-1 EN 60947-5-1 UL 508

Ordering and shipping details

Category	22411-LIMIT SWITCHES,IEC,XCKJ
Discount Schedule	T
GTIN	3389110825688
Returnability	Yes
Country of origin	ID

Packing Units

Unit Type of Package 1	PCE
Number of Units in Package 1	1
Package 1 Height	1.69 in (4.3 cm)
Package 1 Width	2.76 in (7.0 cm)
Package 1 Length	5.00 in (12.7 cm)
Package 1 Weight	16.86 oz (478.0 g)
Unit Type of Package 2	S02
Number of Units in Package 2	18
Package 2 Height	5.91 in (15.0 cm)
Package 2 Width	11.81 in (30.0 cm)
Package 2 Length	15.75 in (40.0 cm)
Package 2 Weight	20.14 lb(US) (9.134 kg)

Offer Sustainability

Sustainable offer status	Green Premium product
California proposition 65	WARNING: This product can expose you to chemicals including: Diisononyl phthalate (DINP), which is known to the State of California to cause cancer, and Di-isodecyl phthalate (DIDP), which is known to the State of California to cause birth defects or other reproductive harm. For more information go to www.P65Warnings.ca.gov
REACh Regulation	REACh Declaration
EU RoHS Directive	Pro-active compliance (Product out of EU RoHS legal scope) EU RoHS Declaration
Mercury free	Yes

RoHS exemption information	Yes
Environmental Disclosure	Product Environmental Profile
Circularity Profile	No need of specific recycling operations

Contractual warranty

Warranty	18 months

Dimensions

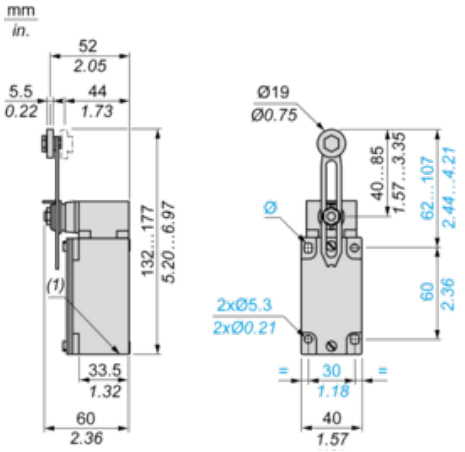

(1) 1 tapped entry 1/2" NPT

Mounting with Cable Entry

Position of Cable Gland

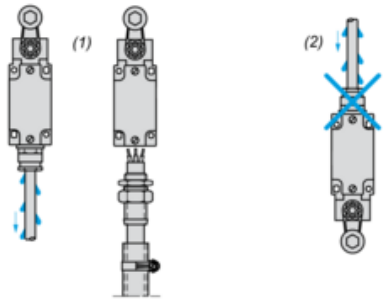

(1) Recommended
(2) To be avoided

Mounting with Rotary Heads and Levers

Type of Cam

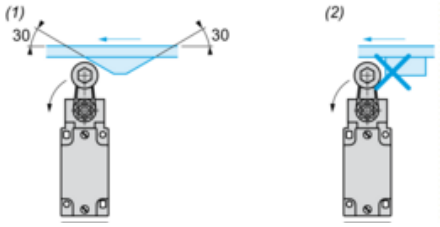

(1) Recommended
(2) To be avoided

Setting-up with Lever Head

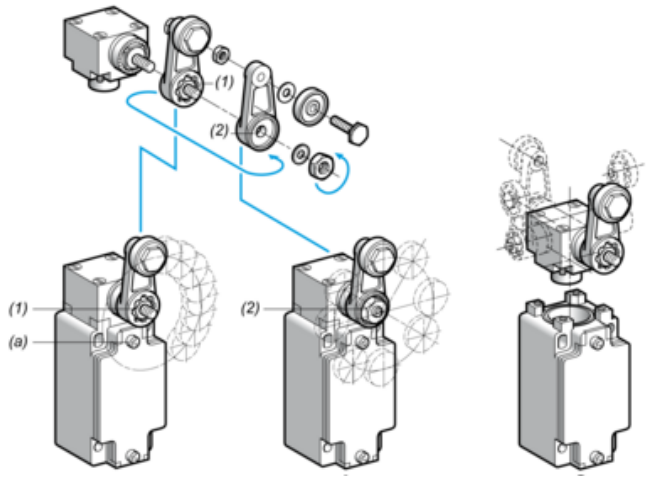

(1) 5° steps throughout 360° / Tightening torque (Min : 1) (Max : 1.5)
(2) 45° steps throughout 360° / Tightening torque (Min : 1) (Max : 1.5)
(a) Tightening torque (Min : 1) (Max : 1.5)

Setting-up with Head ZCKE05

Direction of Actuation Programming

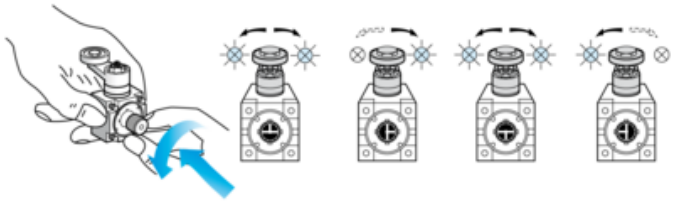

Wiring Diagram

2-pole NC + NO Snap Action

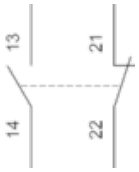

Characteristics of Actuation

Switch Actuation by 30° Cam

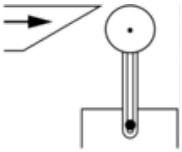

Functionnal Diagram

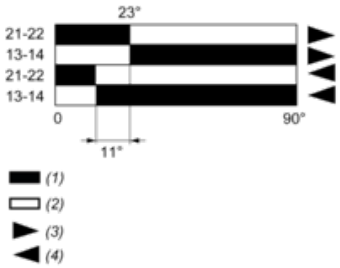

(1) Closed
(2) Open
(3) Tripping
(4) Resetting