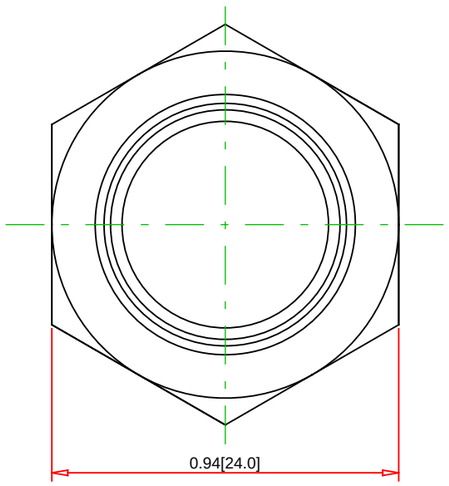

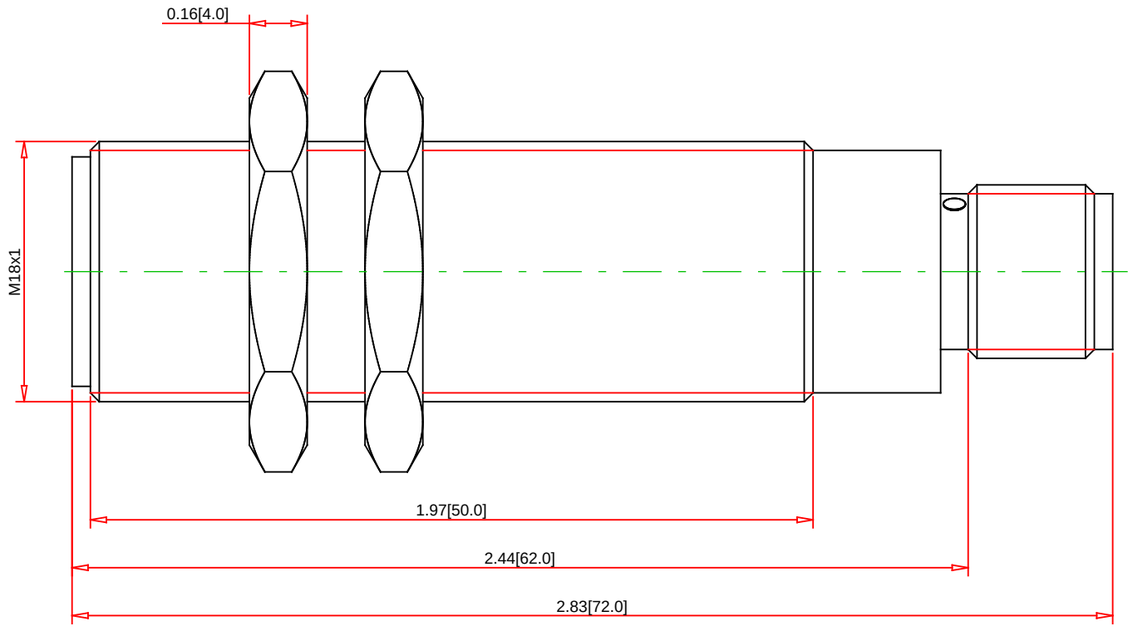

Note:
- Drawings Not To Scale
- Drawings Subject to Change Without Notice
- Dimensions are inches next to [Millimeters]

Part No.:

XU5M18AB20D

Telemecanique Sensors
1875 Founders Drive
Dayton, OH 45420-4017
Customer Care Center : 1-800-435-2121
Web : www.tesensors.com

Technical Information:

Diffuse with Background Suppression:	
Diffuse:	
Polarized Retroreflective:	
Thru Beam:	
Retroreflective:	
Circuit Type:	4-20 mA
Output Mode:	Light Operate
Power:	DC
Voltage Range:	12-24 VDC
Max Load:	
Max Switching Frequency :	20 Hz
Temp Range:	-25° to 55° C (-13° to 131° F)
NEMA Type:	4X (indoor use only)
IP Rating:	67
Standards:	UL, CE Rohs

Specification:

Sensor Type:	Proximity Diffuse - 4-20 mA
Description:	Photoelectric, Proximity Diffuse - 4-20 mA, 18 mm Barrel, 12-24 VDC
Body Style:	Barrel
Diameter:	mm
Housing Material:	Metal - NPB
Face Material:	PMMA
Adjustment:	Pot
Cable Size:	
Connector Type:	4-pin M12
Special Features:	