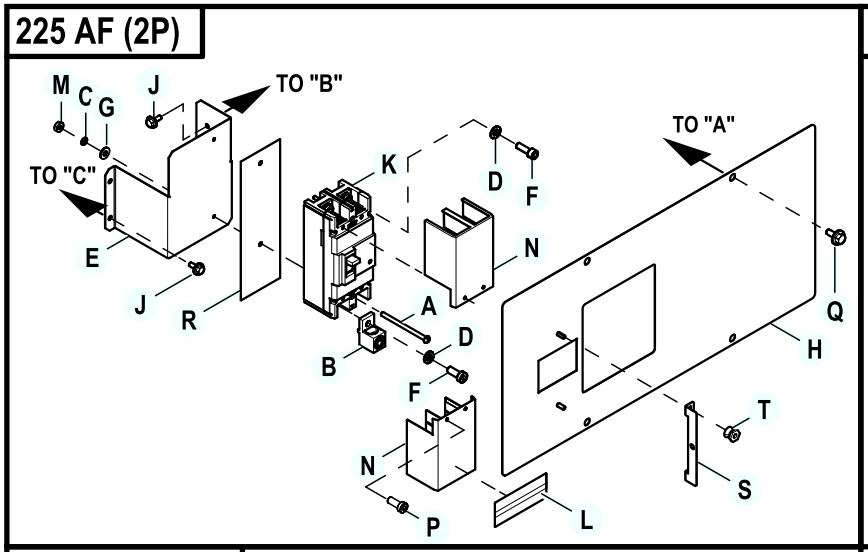
225 AF (2P)
TO "B"
TO "A"
TO "C"
M
C
G
J
K
D
F
N
E
J
R
A
D
B
F
Q
H
T
N
S
P
L

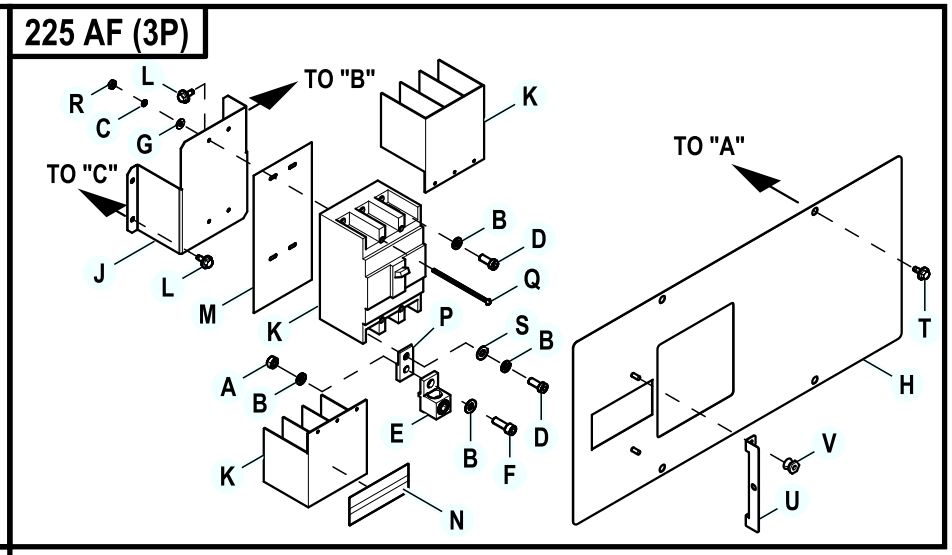
225 AF (3P)
TO "B"
TO "A"
TO "C"
L
R
C
G
K
B
D
J
L
Q
M
K
P
S
B
A
B
E
B
D
F
K
N
T
H
V
U

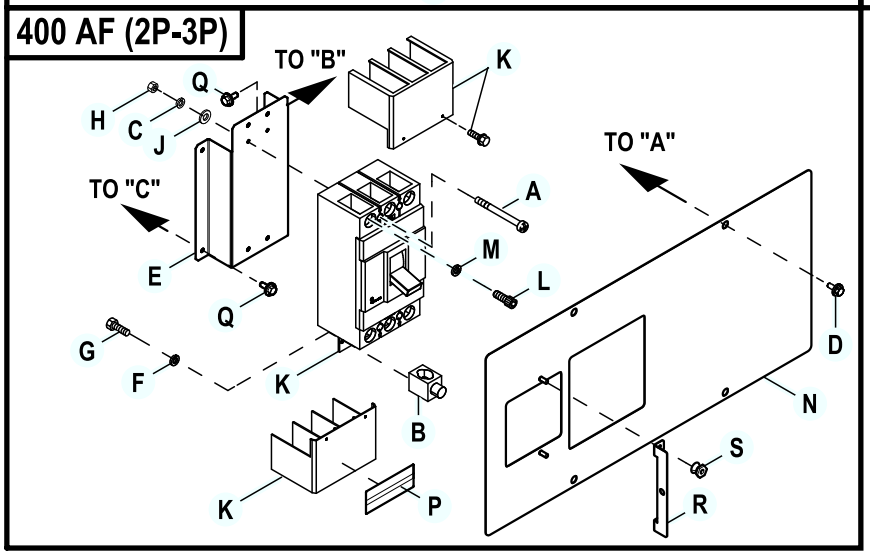
400 AF (2P-3P)
TO "B"
TO "A"
TO "C"
Q
K
H
C
J
A
M
E
L
Q
G
F
K
B
D
N
K
P
S
R

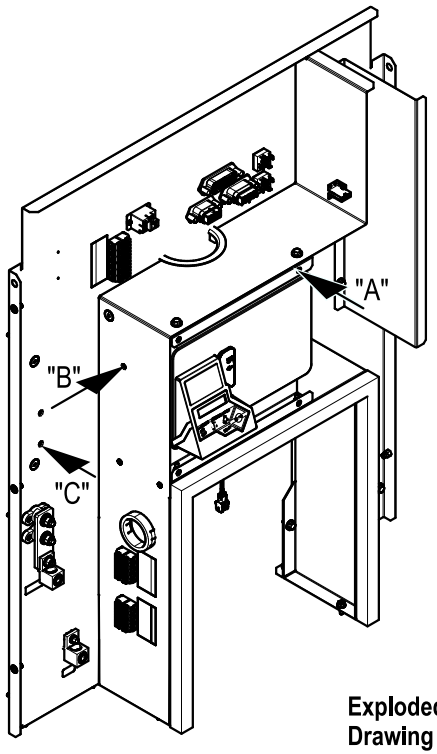
"A"
"B"
"C"

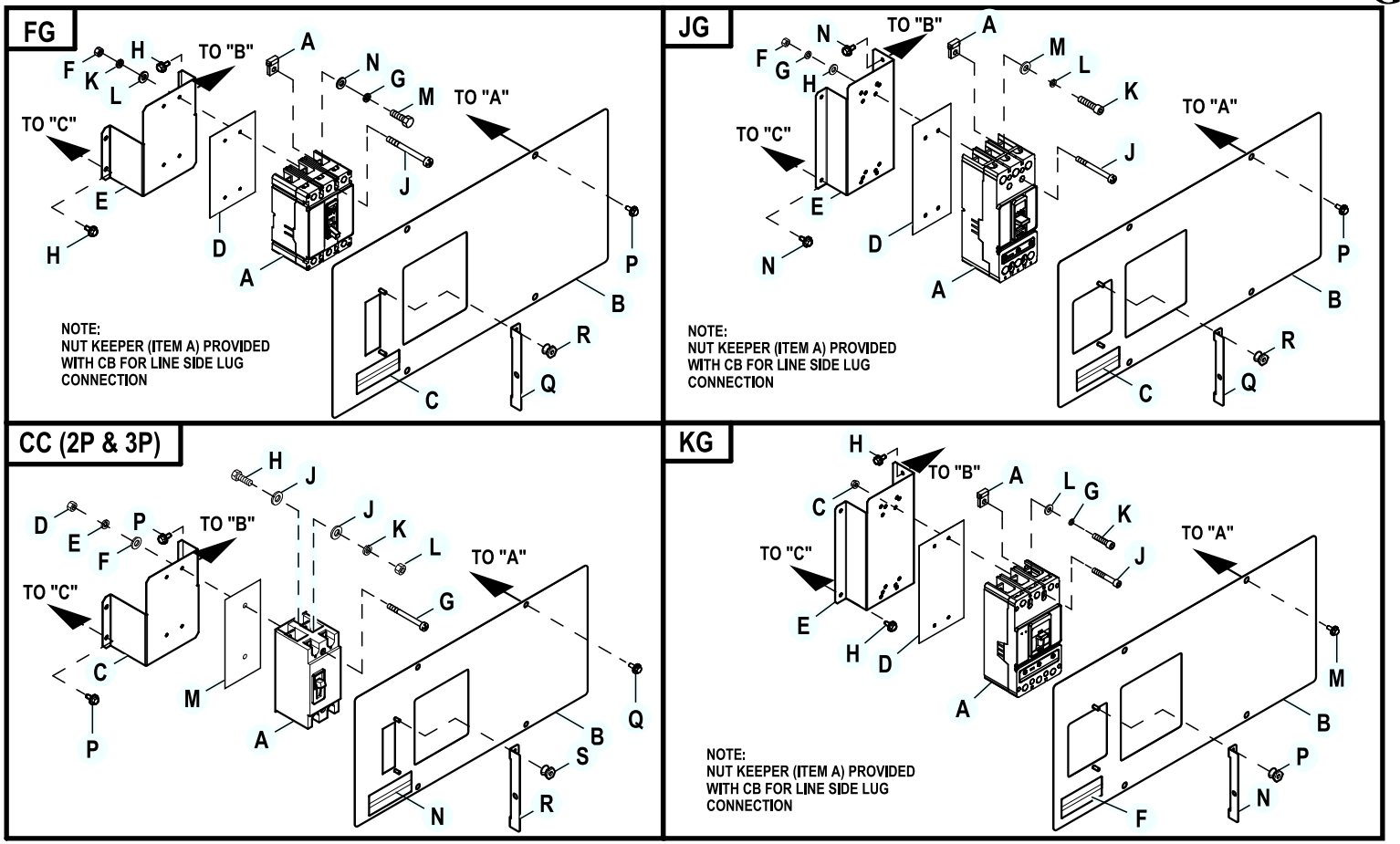
FG
TO "A"
TO "B"
TO "C"
NOTE:
NUT KEEPER (ITEM A) PROVIDED
WITH CB FOR LINE SIDE LUG
CONNECTION
JG
TO "A"
TO "B"
TO "C"
NOTE:
NUT KEEPER (ITEM A) PROVIDED
WITH CB FOR LINE SIDE LUG
CONNECTION
CC (2P & 3P)
TO "A"
TO "B"
TO "C"
KG
TO "A"
TO "B"
TO "C"
NOTE:
NUT KEEPER (ITEM A) PROVIDED
WITH CB FOR LINE SIDE LUG
CONNECTION

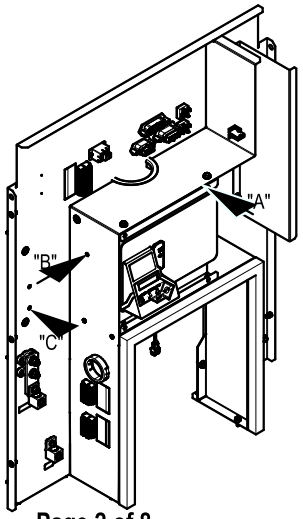
"A"
"B"
"C"

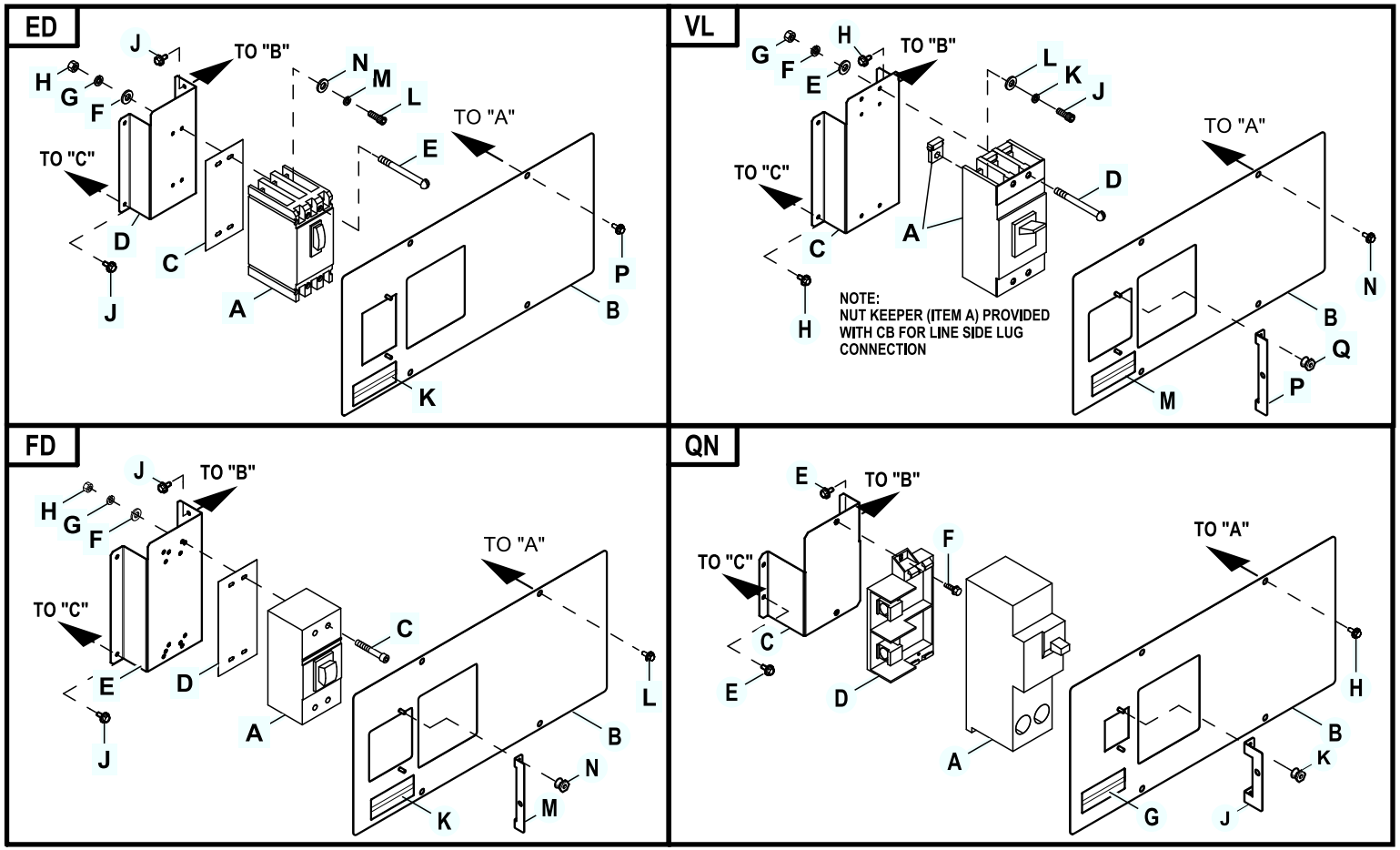
ED
TO "B"
TO "A"
TO "C"
VL
TO "B"
TO "A"
TO "C"
NOTE:
NUT KEEPER (ITEM A) PROVIDED
WITH CB FOR LINE SIDE LUG
CONNECTION
FD
TO "B"
TO "A"
TO "C"
QN
TO "B"
TO "A"
TO "C"

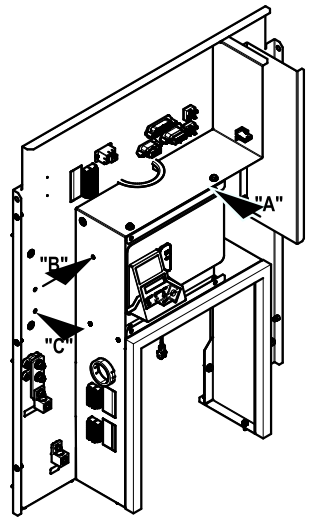
"A"
"B"
"C"

EXPLODED VIEW: EV 27R CIRCUIT BREAKER C2 CPL

DRAWING #: 10000024294

GROUP A

ITEM	PART#	QTY.	DESCRIPTION
		PAGE 1	
		225AF (2P)	
A	0K0973	2	SCREW RHM #8-32 X 2-1/2
	(2)053640	2	SCREW RHM #8-32 X 3-1/4
B	0H6306	2	LUG SLDLSS 350 MCM-6 AL/CU
C	G022264	2	WASHER LOCK #8-M4
D	G022129	4	WASHER LOCK M8-5/16
E	0K1487	1	STANDOFF CB BOX CONBOX.PRT
	(2)0K1004	1	CB STANDOFF G 225AF 3P
F	G049897	4	SCREW SHC M8-1.25 X 20 G8
G	G038150	2	WASHER FLAT #8 ZINC
H	0K2693AST03	1	COVER PLATE CNTRL PNL 225AF 2P
J	0E3257	3	SCREW HWHTF M6-1.0 X 16
K	0K0970	1	CB 125A 2POLE 240V 225AF
	0K0972	1	CB 175A 2POLE 240V 225AF
	0K0971	1	CB 150A 2POLE 240V 225AF
	0K0133	1	CB 200A 2POLE 240V 225AF
	0G5249	1	CB 150A 2 POLE 240V 225AF
L	0G3259	1	DECAL TERMINAL SHOCK HZD BI
M	G022471	2	NUT HEX #8-32 STEEL
N	0K8414	2	CB TERMINAL COVER 2 POLE 240V
P	0K8628	4	SCREW PFH 4-24 X 5/16 TCS
Q	0C2454	4	SCREW HWHT M6-1 X 16 N WA Z/JS
R	0F8432A	1	INSULATOR CB 2P 225AF
S	10000023360	1	ST03 LOCKOUT BRACKET VITZRO 225AF
T	10000028391	2	NUT TAMPER RESISTANT M5-0.8
		225AF (3P)	
A	G045771	3	NUT HEX M8-1.25 G8 CLEAR ZINC
B	G022129	9	WASHER LOCK M8-5/16
C	G022264	4	WASHER LOCK #8-M4
D	G049897	6	SCREW SHC M8-1.25 X 20 G8
E	0F8451	3	LUG SLDLSS 300 MCM-6 AL/CU
F	G058306	3	SCREW SHC M8-1.25 X 25 C12.9
G	G038150	4	WASHER FLAT #8 ZINC
H	0K26930ST03	1	COVER PLATE CNTRL PNL 225AF 3P
J	0K1004	1	STANDOFF CB BOX CONBOX
K	0F4144	1	CB 0050A 3P 480V G 225AF
	0F4145	1	CB 0060A 3P 480V G 225AF
	0F4208	1	CB 0080A 3P 480V G 225AF
	0F4209	1	CB 0090A 3P 480V G 225AF
	0F4147	1	CB 0100A 3P 480V G 225AF
	0F4148	1	CB 0125A 3P 480V G 225AF
	0F4149	1	CB 0150A 3P 480V G 225AF
	0F4150	1	CB 0175A 3P 480V G 225AF
	0F4151	1	CB 0200A 3P 480V G 225AF
L	0E3257	3	SCREW HWHTF M6-1.0 X 16
M	0F8432	1	INSUL CB 225AF
N	0G3259	1	DECAL TERMINAL SHOCK HZD BI
P	0F8843	3	BUS BAR 200A LUG ADAPTOR
Q	G053640	4	SCREW RHM #8-32 X 3-1/4
R	G022471	4	NUT HEX #8-32 STEEL
S	G022145	6	WASHER FLAT 5/16-M8 ZINC
T	0C2454	4	SCREW HWHT M6-1 X 16 N WA Z/JS
U	10000023360	1	ST03 LOCKOUT BRACKET VITZRO 225AF
V	10000028391	2	NUT TAMPER RESISTANT M5-0.8
		400AF (2P & 3P)	
A	G042419	4	SCREW RHM 10-32 X 4
(1)B	0A7822	2 / 3	LUG SLDLSS 600/250-1/0X1/4-28
C	G022152	4	WASHER LOCK #10
D	0C2454	4	SCREW HWHT M6-1 X 16 N WA Z/JS
E	0K8366	1	STANDOFF CB MOUNT CONBOX
(1)F	G022097	4 / 6	WASHER LOCK M6-1/4
(1)G	0A8261	4 / 6	SCREW HHC 1/4-28 X 5/8 .625TH
H	G022158	4	NUT HEX #10-32 STEEL

EXPLODED VIEW: EV 27R CIRCUIT BREAKER C2 CPL

DRAWING #: 10000024294

GROUP A

ITEM	PART#	QTY.	DESCRIPTION
J	G023897	4	WASHER FLAT #10 ZINC
K	0F4153	1	CB 0250A 3P 480V G 400AF
	0F4738	1	CB 0300A 2P 480V G 400AF
(1)L	G052647	4 / 6	SCREW SHC M10-1.5 X 25 C12.9
(1)M	G046526	4 / 6	WASHER LOCK M10
N	0K2693BST03	1	COVER PLATE CNTRL PNL 400AF 3P
P	0G3259	1	DECAL TERMINAL SHOCK HZD BI
Q	0E3257	3	SCREW HWHTF M6-1.0 X 16
R	10000023345	1	ST03 LOCKOUT BRACKET VITZRO S JG VL
S	10000028391	2	NUT TAMPER RESISTANT M5-0.8

NOTES (UNLESS OTHERWISE SPECIFIED):
(1) QTY. REQ. FOR 2 POLE BREAKER / QTY. REQ. FOR 3 POLE BREAKER.
(2) USE WITH CIRCUIT BREAKER 0G5249.

PAGE 2

FG

A	0H5486	1	CB 0060 3P 480V E FG LL
	0H5488	1	CB 0080 3P 600V E FG LL
	0H5490	1	CB 0100 3P 600V E FG LL
B	0K84130ST03	1	COVER PLATE CNTRL PNL E FG
C	0G3259	1	DECAL TERMINAL SHOCK HZD BI
D	0H4698A	1	INSULATOR CB 3P E TYPE CC/FG
E	0K8439	1	STANDOFF CB BOX CONBOX
F	G022471	4	NUT HEX #8-32 STEEL
G	G049226	3	WASHER LOCK M5
H	0E3257	3	SCREW HWHTF M6-1.0 X 16
J	0H5721	4	SCREW PPHM #8-32 X 1-3/4 ZINC
K	G022264	4	WASHER LOCK #8-M4
L	G038150	4	WASHER FLAT #8 ZINC
M	G091526	3	SCREW PPHM M5-0.8 X 12 ZNC
N	G023897	3	WASHER FLAT #10 ZINC
P	0C2454	4	SCREW HWHT M6-1 X 16 N WA Z/JS
Q	10000023327	1	ST03 LOCKOUT BRACKET S BQ E CC FG
R	10000028391	2	NUT TAMPER RESISTANT M5-0.8

JG

A	0H5580	1	CB 0250 3P 600V E JG LL
B	0K2693CST03	1	COVER PLATE CNTRL PNL JG KG 3P
C	0G3259	1	DECAL TERMINAL SHOCK HZD BI
D	0H5576A	1	INSULATOR CB E 3P JG
E	0K8427	1	STANDOFF CB C2 ET KG JG
F	G022127	4	NUT HEX 1/4-20 STEEL
G	G022097	4	WASHER LOCK M6-1/4
H	G022473	4	WASHER FLAT 1/4-M6 ZINC
J	G022770	4	SCREW RHM 1/4-20 X 3
K	G049897	3	SCREW SHC M8-1.25 X 20 G8
L	G022129	3	WASHER LOCK M8-5/16
M	G022145	3	WASHER FLAT 5/16-M8 ZINC
N	0E3257	4	SCREW HWHTF M6-1.0 X 16
P	0C2454	4	SCREW HWHT M6-1 X 16 N WA Z/JS
Q	10000023370	1	ST03 LOCKOUT BRACKET S FD6 E JG KG
R	10000028391	2	NUT TAMPER RESISTANT M5-0.8

EXPLODED VIEW: EV 27R CIRCUIT BREAKER C2 CPL

DRAWING #: 10000024294

GROUP A

ITEM	PART#	QTY.	DESCRIPTION
		CC (2P & 3P)	
A	0H4914	1	CB 0125 3P 240V E CC LL
	0H4915	1	CB 0150 3P 240V E CC LL
	0H4748	1	CB 0175A 2P 240V E CC LL
	0H4916	1	CB 0175 3P 240V E CC LL
	0H4747	1	CB 0150A 2P 240V E CC LL
	0H4749	1	CB 0200A 2P 240V E CC LL
	0H4913	1	CB 0100 3P 240V E CC LL
	0H4917	1	CB 0200A 3P 240V E CC LL
B	0K96140ST03	1	COVER PLATE CNTRL PNL CC
C	0K8415	1	STANDOFF CB BOX CONBOX
(1)D	G022471	2/4	NUT HEX #8-32 STEEL
(1)E	G022264	2/4	WASHER LOCK #8-M4
(1)F	G038150	2/4	WASHER FLAT #8 ZINC
(1)G	G053640	2/4	SCREW RHM #8-32 X 3-1/4
(1)H	G042568	2/3	SCREW HHC M6-1.0 X 20 C8.8
(1)J	G022473	4/6	WASHER FLAT 1/4-M6 ZINC
(1)K	G022097	2/3	WASHER LOCK M6-1/4
(1)L	G049813	2/3	NUT HEX M6-1.0 G8 CLEAR ZINC
M	0H4698	1	INSULATOR CB 2P E TYPE CC
	0H4698A	1	INSULATOR CB 3P E TYPE CC/FG
N	0G3259	1	DECAL TERMINAL SHOCK HZD BI
P	0E3257	3	SCREW HWHTF M6-1.0 X 16
Q	0C2454	4	SCREW HWHT M6-1 X 16 N WA Z/JS
R	10000023327	1	ST03 LOCKOUT BRACKET S BQ E CC FG
S	10000028391	2	NUT TAMPER RESISTANT M5-0.8
		KG	
A	0H5582	1	CB 0300 3P 600V E KG LL
B	0K2693CST03	1	COVER PLATE CNTRL PNL JG KG 3P
C	0D3700	4	NUT FLANGE M6-1.0 NYLOK
D	0H5581A	1	INSULATOR CB E 3P KG
E	0K8427	1	STANDOFF CB C2 ET KG JG
F	0G3259	1	DECAL TERMINAL SHOCK HZD BI
G	G022129	3	WASHER LOCK M8-5/16
H	0E3257	4	SCREW HWHTF M6-1.0 X 16
J	0D2157	4	SCREW SHC M6-1.0 X 50 C8.8
K	G052829	3	SCREW SHC M8-1.25 X 14 C12.9
L	G022145	3	WASHER FLAT 5/16-M8 ZINC
M	0C2454	4	SCREW HWHT M6-1 X 16 N WA Z/JS
N	10000023370	1	ST03 LOCKOUT BRACKET S FD6 E JG KG
P	10000028391	2	NUT TAMPER RESISTANT M5-0.8

NOTES (UNLESS OTHERWISE SPECIFIED):
(1) QTY. REQ. FOR 2 POLE BREAKER / QTY. REQ. FOR 3 POLE BREAKER.

PAGE 3

		ED	
A	0D5553	1	CB 0060A 3P 480V S ED4 LL
	0D5555	1	CB 0080A 3P 480V S ED4 LL
	0D5557	1	CB 0100A 3P 480V S ED4 LL
	0D9693	1	CB 0125A 3P 480V S ED4 LL
B	0K84800ST03	1	COVER PLATE CNTRL PNL ED
C	0F0492	1	INSULATOR CB S(ED-3P)
D	0K8481	1	STANDOFF CB MOUNT CONBOX
E	G048927	4	SCREW RHM #10-32 X 4-1/2
F	G023897	4	WASHER FLAT #10 ZINC
G	G022152	4	WASHER LOCK #10
H	G022158	4	NUT HEX #10-32 STEEL
J	0E3257	3	SCREW HWHTF M6-1.0 X 16
K	0G3259	1	DECAL TERMINAL SHOCK HZD BI
L	0A8278	3	SCREW SHC 1/4-28 X 3/4 G8.8 NZ
M	G022097	3	WASHER LOCK M6-1/4
N	0D5621	3	WASHER-STEP 1/2ODX9/32ID BRASS
P	0C2454	4	SCREW HWHT M6-1 X 16 N WA Z/JS

EXPLODED VIEW: EV 27R CIRCUIT BREAKER C2 CPL

DRAWING #: 10000024294

GROUP A

ITEM	PART#	QTY.	DESCRIPTION
		VL	
A	0H7519	1	CB 0300A 3P 600V S JG-VL LL
B	0K2693BST03	1	COVER PLATE CNTRL PNL 400AF 3P
C	0K8366	1	STANDOFF CB MOUNT CONBOX
D	G042419	4	SCREW RHM 10-32 X 4
E	G023897	4	WASHER FLAT #10 ZINC
F	G022152	4	WASHER LOCK #10
G	G022158	4	NUT HEX #10-32 STEEL
H	0E3257	4	SCREW HWHTF M6-1.0 X 16
J	G040976	3	SCREW SHC M8-1.25 X 20 C12.9
K	G022129	3	WASHER LOCK M8-5/16
L	G022145	3	WASHER FLAT 5/16-M8 ZINC
M	0G3259	1	DECAL TERMINAL SHOCK HZD BI
N	0C2454	4	SCREW HWHT M6-1 X 16 N WA Z/JS
P	10000023345	1	ST03 LOCKOUT BRACKET VITZRO S JG VL
Q	10000028391	2	NUT TAMPER RESISTANT M5-0.8
		FD	
A	0D5572	1	CB 0150A 3P 600V S FD6 LL
	0D5573	1	CB 0175A 3P 600V S FD6 LL
	0D5574	1	CB 0200A 3P 600V S FD6 LL
	0D5576	1	CB 0250A 3P 600V S FD6 LL
B	10000029036	1	ST03 COVER PLATE CNTRL PNL FD
C	G081320	4	SCREW SHC 1/4-20 X 4.5 G8.8 NZ
D	0F0199	1	INSULATOR CB FD FRAME 30MIL
E	0K8427	1	STANDOFF CB C2 ET KG JG
F	G022473	4	WASHER FLAT 1/4-M6 ZINC
G	G022097	4	WASHER LOCK M6-1/4
H	G022127	4	NUT HEX 1/4-20 STEEL
J	0E3257	4	SCREW HWHTF M6-1.0 X 16
K	0G3259	1	DECAL TERMINAL SHOCK HZD BI
L	0C2454	4	SCREW HWHT M6-1 X 16 N WA Z/JS
M	10000023370	1	ST03 LOCKOUT BRACKET S FD6 E JG KG
N	10000028391	2	NUT TAMPER RESISTANT M5-0.8
		QN	
A	0E7283	1	CB 0150A 2P 240V S QN2 LL
	0E7284	1	CB 0175A 2P 240V S QN2 LL
	0E3628	1	CB 0200A 2P 240V S QN2 LL
B	0K84490ST03	1	COVER PLATE CNTRL PNL QN
C	0K1004	1	CB STANDOFF G 225AF 3P
D	0E3664	1	BASE, QN CIRCUIT BREAKER
E	0E3257	3	SCREW HWHTF M6-1.0 X 16
F	G074908	2	SCREW HHTT M5-0.8 X 10 BP
G	0G3259	1	DECAL TERMINAL SHOCK HZD BI
H	0C2454	4	SCREW HWHT M6-1 X 16 N WA Z/JS
J	10000023315	1	ST03 LOCKOUT BRACKET S QN2
K	10000028391	2	NUT TAMPER RESISTANT M5-0.8

ITEM	PART#	QTY.	DESCRIPTION

This page left blank intentionally