LIGHTOLIER
by signify

Downlighting

LyteCaster LED 4"

L4S Square Downlight



Lightolier LyteCaster LED downlights feature a 3.5" luminaire height that conserves plenum space without compromising the 70° physical and reflected cutoff. The modular and interchangeable light engine allows for an easy future upgrade and the luminaire is wet location listed. Square trims are compatible with the round new construction frame-in kit and high lumen light engines.

Project:
Location:
Cat.No:
Type:
Lamps: Qty:
Notes:

Complete product = Frame-in kit + Light engine + Trim Order each separately

Frame-In kit

example: L4R10AE1VA

Series	Lumens	Frame type	Dimming / Voltage	Version[2]
L4R				VA
L4R LyteCaster LED 4" Round	**10** 1000lm (Delivers 850lm)[1]	**A** AirSeal IC, New Construction, Screw **AN** AirSeal IC, New Construction, Nail	**E1** ELV/Triac dimming, 120V **Z10U** 0-10V, Universal 120V-277V	**VA** Version A
	06 650lm (must be used with 650lm light engine)	**R** AirSeal IC, Remodeler		

Light engine

example: L4R10827VA

Series	Lumens	CRI / CCT	Version[2]
L4R			VA
L4R LyteCaster LED 4" Round	**10** 1000lm (Delivers 850lm)[1]	**827** 80CRI / 2700K **830** 80CRI / 3000K **835** 80CRI / 3500K **840** 80CRI / 4000K **927** 90CRI / 2700K	**VA** Version A
	06 650lm (must be used with 650lm frame-in kit)		



Open Downlight (white)



Baffle Downlight (white)

Trim

example: L4SDD

Series	Luminaire type	Finish
L4S		
L4S LyteCaster LED 4" Square	**D** Open Downlight	**D** Clear diffuse (with white flange) **W** White (with white flange)
	B Baffle Downlight	**W** White (with white flange)



Open Downlight (clear diffuse)

1. Version A (VA) frames and light engines are not compatible with previous versions.
2. Tested at 80CRI 3500lm.

L4S LyteCaster LED 4"

Square Downlight

Dimensions

Bottom view

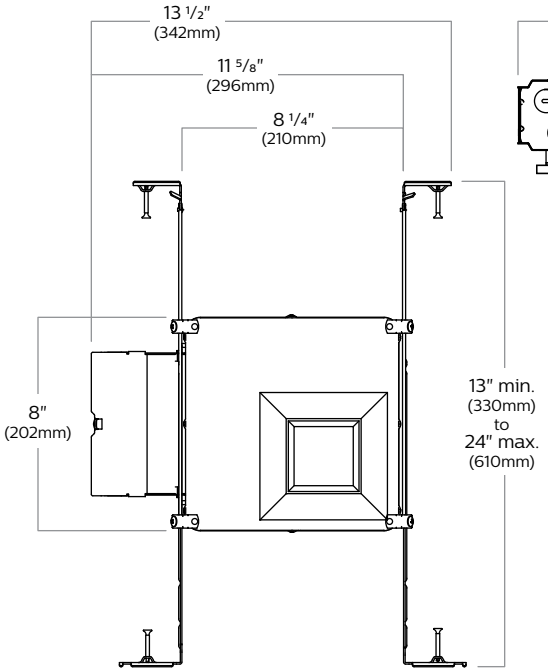

Side view

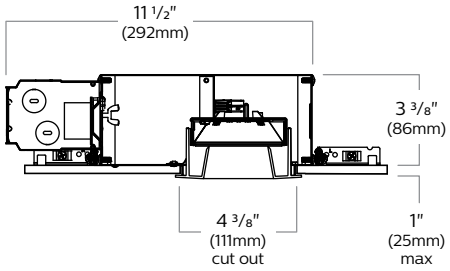

Trim

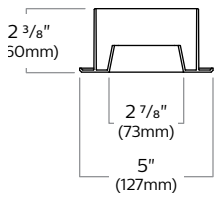

Light engine

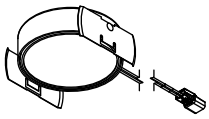

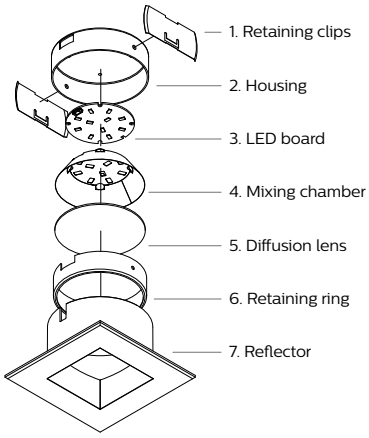

Features

Housing: .026" galvanized steel. UL listed for direct contact with thermal insulation. Airseal® housing minimizes air leakage to less than 2 CFM at 1.57PSF (or 75PA), which complies with the International Energy Conservation Code, and Washington State Energy Code (Section 502.4). This reduces heat loss and condensation in ceiling. Access door for inspection of junction box.

Lower frame and top cover: .026" galvanized steel. Accommodates ceilings up to 1" (25mm) thick. Deep integral lip is 3/8" (9.5mm) with four notches at 90° apart to simplify alignment. Locks into position along length of mounting bars with locking screws.

Junction Box: 2.5" X 5 3/8" X 2" (27 cu. in) .032" galvanized steel. UL listed 90 ° supply conductors. Rated for branch circuit wiring supplying connected luminaires (daisy chaining).

Ceiling cutout: 4 3/8" (111mm).

Driver ELV /Triac: 120V, 50/60Hz. RoHS compliant, Class 2 power supply. Complies with FCC rules per Title 47 Part 15 (Class B) for EMI/RFI (conducted & radiated).
Class A sound rating.

0-10V: 120/277V, 50/60Hz. RoHS compliant, Class 2 power supply. Complies with FCC rules per Title 47 Part 15 (Class A) for EMI/RFI (conducted & radiated). Class A sound rating.

Retaining clips: Permit easy and fast installation of light engine/trim.

Mounting bars: .059" galvanized steel. Bars pivot for easy attachment and wire-in below ceiling line. Bars extend to accommodate 16" (406mm) to 24" (610mm) O.C. joist spacing. Bars can accommodate 12" (305mm) O.C. joist spacing after a slight field modification (see Instruction sheet). Features integral self tapping phillips/square drive screws for secure attachment to wood or metal construction. Also available with integral nails. Attaches to T-bar ceilings without the need of accessories. Bars installed on shortest dimension of frame,but can be easily repositioned 90° from original position.

Energy Star

Product family has Energy Star certification with all new construction frame and 80CRI option with remodeler frame.

Electrical

Lifetime: Expected lifetime 50,000 hours and backed by a 5-year warranty.
(see Philips.com/warranties for details)

Recommended dimmers

See LED-DIM Specification Sheet.

Labels

cULus Listed Type I.C., frames are suitable for damp location.

Trims are cULus suitable for wet location.

Complies with Air Leakage.

1. **Housing:** (0.05") thick powder coated aluminum provides integrated thermal management allowing for a low profile at less than 3-1/2" tall.
2. **LED board:** High efficiency mid-flux LED's.
3. **Mixing chamber:** 98% reflective, highly diffuse film.
4. **Diffusion lens:** (0.06") thick acrylic opal lens provides an even source of illumination.
5. **Retaining ring:** (0.04") thick powder coated aluminum, secures module components.
6. **Reflector:** 30% glass reinforced injection molded polycarbonate is durable and provides a 70° cutoff to the source.
7. **Retaining clips:** 29 gauge Stainless Steel, allows tool-less installation of light engine to trim.

L4S LyteCaster LED 4"

Square Downlight

Remodeler kit dimensions

Bottom view

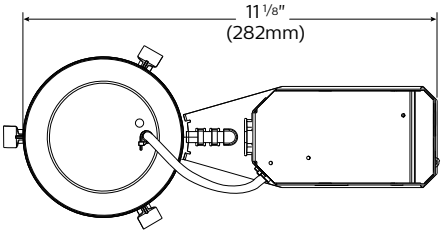

Side view

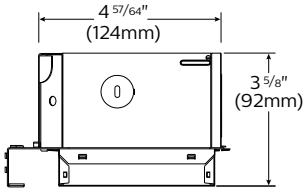

Side view

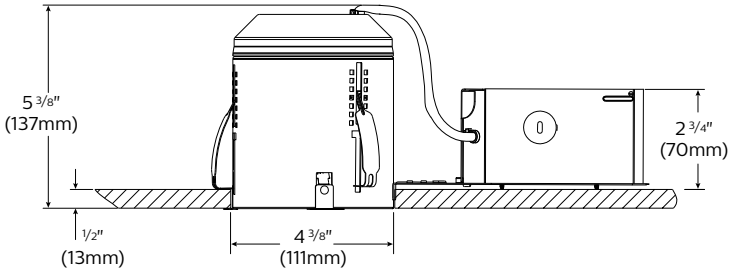

Features

Housing: .032 Aluminum. UL listed for direct contact with thermal insulation. Integral retaining spring secures housing to ceilings up to 2" thick. Removable for access to junction box and ceiling plenum. 5.5" maximum for use in 2" x 6" joist construction and shallow plenum applications. Airseal® housing minimizes air leakage to less than 2 CFM at 1.57PSF (or 75PA), which complies with the International Energy Conservation Code, and Washington State Energy Code (Section 502.4). This reduces heat loss and condensation in ceiling.

Junction Box: 2.5" x 2.5" x 4.875" (29 cu in.) .031" galvanized steel. UL listed for 90°C supply conductors. Rated for branch circuit wiring supplying connected fixtures.

Retaining clips: Permit easy and fast installation of light engine/trim.

Driver: ELV /Triac: 120V, 50/60Hz. RoHS compliant, Class 2 power supply. Complies with FCC rules per Title 47 Part 15 (Class B) for EMI / RFI (conducted & radiated). Class A sound rating.

0-10V: 120/277V, 50/60Hz. RoHS compliant, Class 2 power supply. Complies with FCC rules per Title 47 Part 15 (Class A) for EMI / RFI (conducted & radiated). Class A sound rating.

Ceiling cutout: 6.375" (162mm).

Electrical

Lifetime: Expected lifetime 50,000 hours and backed by a 5-year warranty. (see Philips.com/warranties for details)

Recommended dimmers

See LED-DIM specification sheet.

Labels

cULus Listed Type I.C., frames are suitable for damp location.

Trims are cULus suitable for wet location (no shower lens unit required).

Complies with Air Leakage.

ENERGY STAR® certified.

L4S LyteCaster LED 4"

Square Downlight

1000lm Engine, 76.0 lm/w

Candela Curve

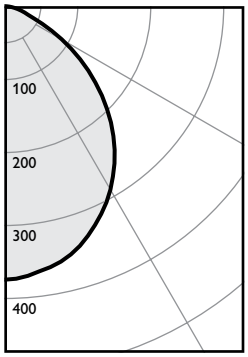

Frame: **L4R10AE1VA**
Engine: **L4R10835VA**
Trim: **L4SDW**

Output lumens:	798.5 lms
Input watts:	10.5 W
CRI:	80 min
CCT[1]:	3500K
Spacing Crit.:	1.2
Beam Angle:	93°

Zonal summary

Zone	Lumens	%Luminaire
0-30	134	16.8%
0-40	441	55.3%
0-60	705	88.3%
0-90	798	100.0%

Angle	0°	45°	Lumens
0	374	374	
5	370	371	35
10	363	364	
15	352	353	99
20	334	335	
25	314	313	144
30	290	288	
35	263	259	163
40	232	228	
45	198	195	151
50	163	160	
55	127	126	112
60	91	92	
65	57	61	60
70	35	38	
75	24	24	26
80	15	15	
85	7	7	7
90	0	0	

Single unit data

Height to lighted plane	Initial center beam foot-candles	Beam diameter (ft)*
5'	15	6.0'
6'	10	7.2'
7'	8	8.4'
8'	6	9.6'
9'	5	10.8'

* Beam diameter is where foot-candles drop to 50% of maximum.

Multiple unit data - RCR 2

Spacing on center	Initial center beam foot-candles	Watts per sq. ft.
5'	33.4	0.47
6'	21.9	0.31
7'	15.7	0.22
8'	13.1	0.18
9'	10.4	0.15

38' x 38' x 10' Room, Workplane 2.5' above floor, 80/50/20% Reflectances

Efficacy: 76.0 lm/w
Report[2]: 1124GFR

Coefficients of utilization

Ceiling	80%				70%		50%		30%		0%
Wall	70	50	30	10	50	10	50	10	50	10	0
RCR	Zonal cavity method - Effective floor reflectance = 20%										
0	119	119	119	119	116	116	111	111	106	106	100
1	110	106	103	99	104	98	100	95	96	92	87
2	102	95	89	84	93	83	89	81	86	79	75
3	94	84	77	71	83	71	80	69	77	68	65
4	86	76	68	62	74	61	72	60	70	60	57
5	80	68	60	54	67	54	65	53	63	53	50
6	74	62	54	48	61	48	59	47	58	47	44
7	69	57	48	43	56	43	54	42	53	42	40
8	65	52	44	38	51	38	50	38	49	38	36
9	60	48	40	35	47	35	46	35	45	34	33
10	57	44	37	32	44	32	43	32	42	31	30

Room Cavity Ratio

Adjustment factors

90CRI 2700K =	71%
90CRI 3000K =	81%
80CRI 2700K =	89%
80CRI 3000K =	97%
80CRI 3500K =	100%
80CRI 4000K =	102%

650lm Engine, 78.7 lm/w

Candela Curve

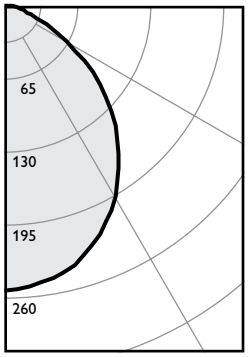

Frame: **L4R06RE1VA**
Engine: **L4R06835VA**
Trim: **L4SDW**

Output lumens:	543 lms
Input watts:	6.9 W
CRI:	80 min
CCT[1]:	3500K
Spacing Crit.:	1.2
Beam Angle:	93°

Zonal summary

Zone	Lumens	%Luminaire
0-30	188	34.7%
0-40	298	54.9%
0-60	477	87.8%
0-90	543	100.0%

Angle	0°	45°	Lumens
0	252	252	
5	250	250	24
10	246	245	
15	238	239	67
20	226	227	
25	212	212	97
30	195	194	
35	176	175	110
40	156	154	
45	133	132	102
50	110	108	
55	86	86	77
60	62	63	
65	40	43	42
70	25	27	
75	17	17	19
80	10	10	
85	5	5	5
90	0	0	

Single unit data

Height to lighted plane	Initial center beam foot-candles	Beam diameter (ft)*
5'	10	6.0'
6'	7	7.2'
7'	5	8.4'
8'	4	9.6'
9'	3	10.8'

* Beam diameter is where foot-candles drop to 50% of maximum.

Multiple unit data - RCR 2

Spacing on center	Initial center beam foot-candles	Watts per sq. ft.
5'	22.7	0.31
6'	14.9	0.20
7'	10.6	0.14
8'	8.9	0.12
9'	7.1	0.10

38' x 38' x 10' Room, Workplane 2.5' above floor, 80/50/20% Reflectances

Efficacy: 78.7 lm/w
Report[2]: 1257GFR

Coefficients of utilization

Ceiling	80%				70%		50%		30%		0%
Wall	70	50	30	10	50	10	50	10	50	10	0
RCR	Zonal cavity method - Effective floor reflectance = 20%										
0	119	119	119	119	116	116	111	111	106	106	100
1	110	106	102	99	104	98	100	94	96	92	87
2	102	94	88	83	92	82	89	80	86	79	75
3	93	84	77	71	83	70	80	69	77	68	65
4	86	75	67	61	74	61	72	60	69	59	57
5	80	68	60	54	67	53	65	53	63	52	50
6	74	62	53	47	61	47	59	47	57	46	44
7	69	56	48	42	55	42	54	42	53	42	39
8	64	52	44	38	51	38	50	38	48	38	36
9	60	48	40	35	47	34	46	34	45	34	32
10	57	44	37	32	44	31	43	31	42	31	29

Room Cavity Ratio

Adjustment factors

90CRI 2700K =	71%
90CRI 3000K =	81%
80CRI 2700K =	89%
80CRI 3000K =	97%
80CRI 3500K =	100%
80CRI 4000K =	102%

1. Correlated Color Temperature within specs as defined in ANSI_NEMA_ANSLG C78.377-2008: Specifications for the Chromaticity of Solid State Lighting Products.
2. Tested using absolute photometry as specified in LM79: IESNA Approved Method for the Electrical and Photometric Measurements of Solid-State Lighting Products.

©2019 Signify Holding. All rights reserved. This document may be subject to change. No representation or warranty as to the accuracy or completeness of the information included herein is given and any liability for any action in reliance thereon is disclaimed. All trademarks are owned by Signify Holding or their respective owners.

Signify North America Corporation
200 Franklin Square Drive,
Somerset, NJ 08873
Telephone 855-486-2216

Signify Canada Ltd.
281 Hillmount Road,
Markham, ON, Canada L6C 2S3
Telephone 800-668-9008