SYLVANIA Luminaire

Contractor Series RT Screw-based

Application

Ideal for retrofit applications in healthcare, hospitality, office, residential and retail using 4 inch, 5 inch & 6 inch housings.

Benefits and Features

- Lumen Package:
  - RT4 with 600 lumens
  - RT5/6 with 675 lumens
- Complete product mix with all color temperatures available: 2700K, 3000K, 4000K and 5000K
- Integrated white trim, white baffle reflector, socket adaptor, airtight ring (included)
- No warm-up time, instant-on with full light output and consistent lamp to lamp color
- RT5/6 is compatible with 5 inch & 6 inch housings
- Up to 80 LPW
- CRI >80
- Offered in 7.5 and 8.5 watts
- 110° beam angle

Electrical

- 120VAC
- Power Factor >70%
- Phase-Cut Dimmable

Rated Life

- 35,000 hours (L_{70})

Warranty

- 5-year

Ambient Operating Range

- -4°F to +104°F (-20°C to +40°C)

Certifications and Listings

- UL
- ENERGY STAR®

RT4



RT5/6



Wattage Comparison

Traditional Source	Traditional System Wattage	LED System Wattage	Energy Savings
Incandescent	65W	7.5W	88%
Incandescent	65W	8.5W	87%

Installation

- Suitable for indoor and outdoor dry, damp and wet locations.
- Suitable for dimmers or in housings controlled by a dimmer. For a list of compatible dimmers, please refer to https://www.sylvania.com/en-us/products/solid-state-lighting-led/Pages/ULTRADownlight-LED-Retrofit-Kits.aspx
- The RT4 & RT5/6 Screw-based recessed downlight kits are dimmable down to 10% of full light output with compatible dimmers. The minimum dimming value is based on light output using compatible dimmers and may not be an indication of the kit's full rated capability.
- Not intended for use with emergency light fixtures or exit lights.
- For use in housings that can structurally support a lamp weighing one pound.
- RT5/6 designed to install in standard 5" and 6" insulated and non-insulated housings.
- Compatible with Leviton SureSlide model 6674, Lutron Maesto C-L model MACL-153P, Lutron Caseta PD-6WCL, Lutron model DVCL-153P, and Leviton model 6672.

Specification Data

Catalog #	Type
Project	
Comments	
Prepared by	

Ordering Guide

LED	/	RTX	/	XXX	/	8	XX	/	G2
LED		RT = Recessed Downlight RT4 = 4" Downlight RT5/6 = 5/6" Downlight		Wattage 600 = 600 lumens 675 = 675 lumens		CRI 8 = >80	Color Temperature 27 = 2700K 30 = 3000K 40 = 4000K 50 = 5000K		Generation G2 = Generation 2

Ordering Information

Item Number	Ordering Abbreviation	Power (W)	Base Type	Replaces	Input Voltage (V)	Average Life (hrs)	CCT	Case Qty	Typical Lumens (lm)	CRI	Power Factor	ENERGY STAR®	T20	T24
40616	LED/RT4/600/827/G2	7.5	E26 Medium	50W	120	35,000	2700K	4	600	>80	>70	Yes	No	No
40617	LED/RT4/600/830/G2	7.5	E26 Medium	50W	120	35,000	3000K	4	600	>80	>70	Yes	No	No
40618	LED/RT4/600/840/G2	7.5	E26 Medium	50W	120	35,000	4000K	4	600	>80	>70	Yes	No	No
40619	LED/RT4/600/850/G2	7.5	E26 Medium	50W	120	35,000	5000K	4	600	>80	>70	Yes	No	No
40620	LED/RT56/675/827/G2	8.5	E26 Medium	65W	120	35,000	2700K	4	675	>80	>70	Yes	No	No
40621	LED/RT56/675/830/G2	8.5	E26 Medium	65W	120	35,000	3000K	4	675	>80	>70	Yes	No	No
40622	LED/RT56/675/840/G2	8.5	E26 Medium	65W	120	35,000	4000K	4	675	>80	>70	Yes	No	No
40623	LED/RT56/675/850/G2	8.5	E26 Medium	65W	120	35,000	5000K	4	675	>80	>70	Yes	No	No

Energy Savings

Basic Product Description	LED Life (hrs)	LED Lumens	Similar Incandescent (hrs)	Incandescent Lumens	Watts Saved	Energy Savings*	LED Life vs Incandescent
LED/RT4/600/8XX/G2	35,000	600	2000	640	49.5	$90.00	17.5x
LED/RT56/675/8XX/G2	35,000	675	2000	640	48.5	$102.00	17.5x

*Energy savings over life of lamp calculated at $0.11/kWh

Physical Information

Lamp Description	(A) Height in (mm)	(B) Diameter in (mm)
LED/RT4/600/8XX/G2	2.52 (64)	5.51 (140)
LED/RT56/675/8XX/G2	2.56 (65)	7.32 (186)

RT4

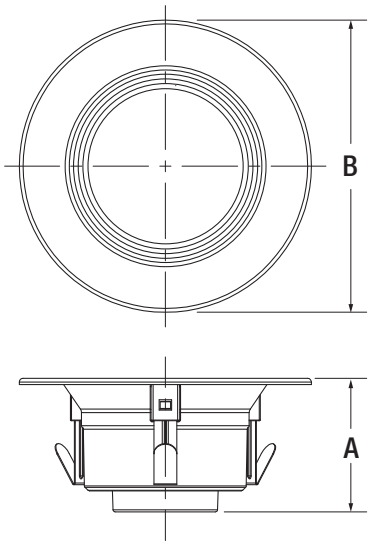

RT5/6

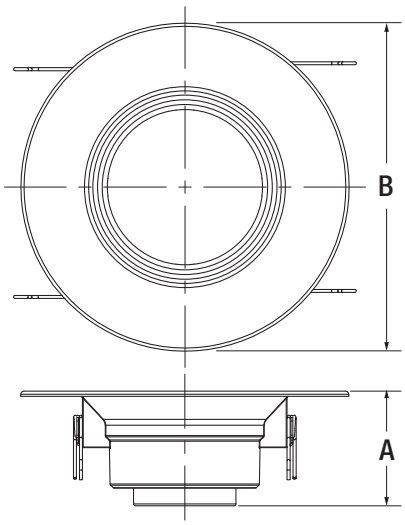

Photometric Data

RT4 600lm

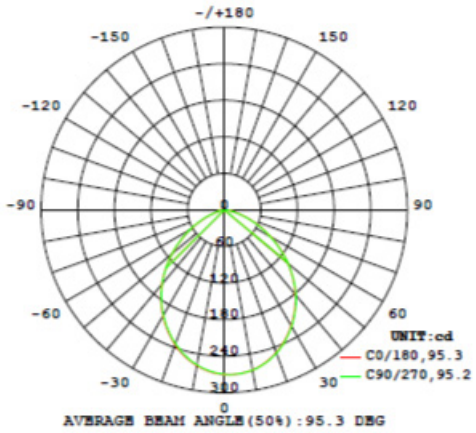

RT5/6 675lm

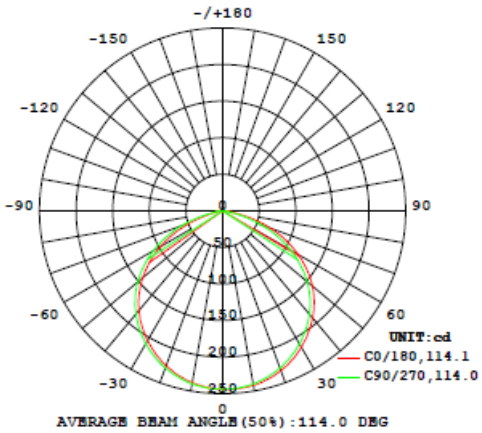

LEDVANCE LLC
200 Ballardvale Street
Wilmington, MA 01887 USA
Phone 1-800-LIGHTBULB (1-800-544-4828)
www.sylvania.com

SYLVANIA and LEDVANCE are registered trademarks.
All other trademarks are those of their respective owners.
Licensee of product trademark SYLVANIA in general lighting.
Specifications subject to change without notice.

/sylvania /sylvania

© 2020 LEDVANCE LLC