ALED® 50W -150W WITH UNIVERSAL ARM INSTRUCTIONS

Thank you for buying RAB lighting fixtures. Our goal is to design the best quality products to get the job done right. We'd like to hear your comments. Call the Marketing Department at 888-RAB-1000 or email: marketing@rabweb.com

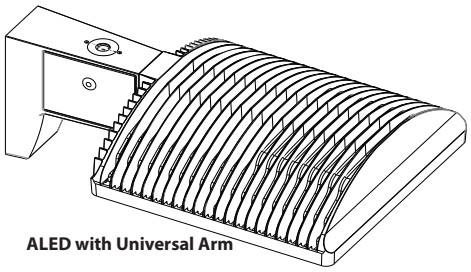

ALED with Universal Arm

IMPORTANT

READ CAREFULLY BEFORE INSTALLING FIXTURE. RETAIN THESE INSTRUCTIONS FOR FUTURE REFERENCE.

RAB fixtures must be wired in accordance with the National Electrical Code and all applicable local codes. Proper grounding is required for safety. This product must be installed in accordance with the applicable installation code by a person familiar with the construction and operation of the product and the hazards involved.

WARNING: Make certain power is OFF before installing or maintaining fixture. No user serviceable parts inside.

MOUNTING THE UNIVERSAL ARM ON THE FIXTURE

1. Remove the **Arm Cover** from the **Arm**.
2. Feed wires from **Fixture** through **Gasket** into **Arm**.
3. Line up **Arm** and **Fixture**. Place flat washers, lock washers and nuts on the **Short 3/8-16 bolts** inside the **Arm** and tighten securely to housing.
4. Make sure the **Gasket** is secure between **Arm** and **Fixture**.

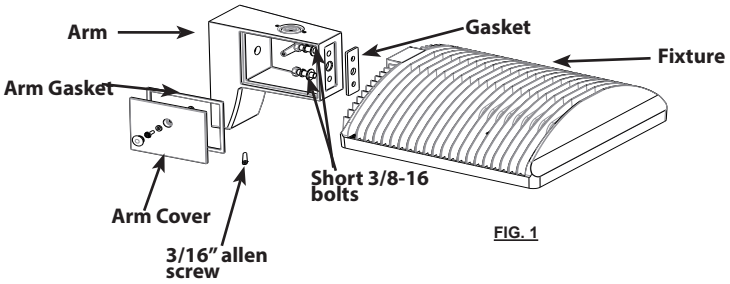

FIG. 1

SQUARE POLE BRACKET MOUNT

1. Remove **Round pole** adaptor and **RPA gasket**.
2. Place the **Bolster plate** inside the pole..
3. Place the **bracket** to match the holes on the **pole**
4. Feed supply wires from the pole through the **Bracket** to be connected to the **Arm.**
3. Place **flat washers**, **lock washers** and **nuts** on the **Short 3/8-16 bolts** tighten to the pole.

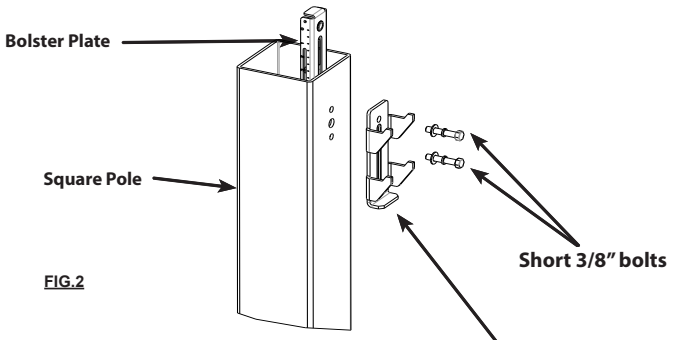

FIG.2

ROUND POLE BRACKET MOUNT

1. Place **Round Pole Adaptor (RPA)** and **RPA Gasket** between the fixture and drilled **Pole** as shown in Fig.3.
2. Line up the holes of the **Gaskets** and **Round Pole Adaptor** with top hole in the pole drilling pattern.
3. Feed supply wires from the pole through the **Bracket** to be connected to the **Arm**.
4. Place **long 3/8" Bolts** provided through the top hole of the RPA and Gaskets to the Round **Pole** thread into **Bolster Plate**.

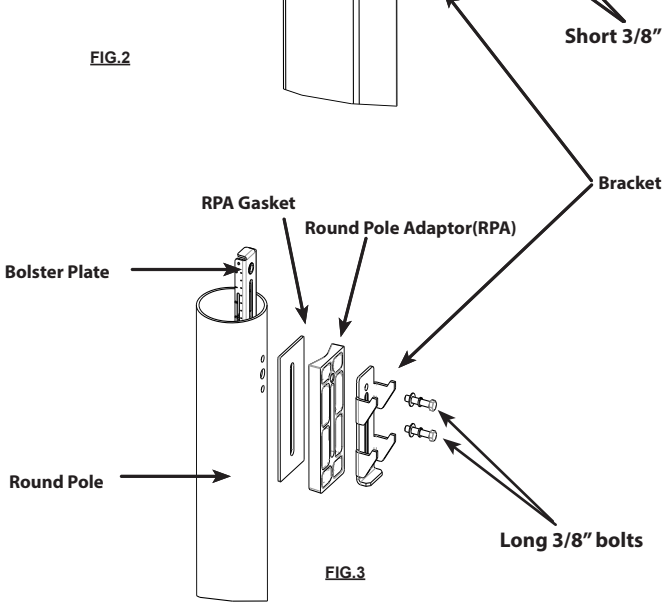

FIG.3

ALED® 50W -150W WITH UNIVERSAL ARM INSTRUCTIONS

Thank you for buying RAB lighting fixtures. Our goal is to design the best quality products to get the job done right. We'd like to hear your comments. Call the Marketing Department at 888-RAB-1000 or email: marketing@rabweb.com

MOUNTING FIXTURE TO THE POLE

1. Remove the **Arm Cover** from the **Arm**.
2. Feed supply wires which are already pulled out from the pole through the bracket into the **Arm**.
3. Make necessary connections inside the **Arm** and knot wires for strain relief.
4. Slide the **metal hanger plates** at the back of the Arm to the **mounting hooks** of the bracket on the pole,to secure the fixture to the pole.
5. Replace the **Arm Cover**. Be sure the **Gasket** on **Arm Cover** is in place. Tighten **Screws** and add the **Plugs**. Secure **Pole cap**. Tighten Set screw at the bottom of the arm.

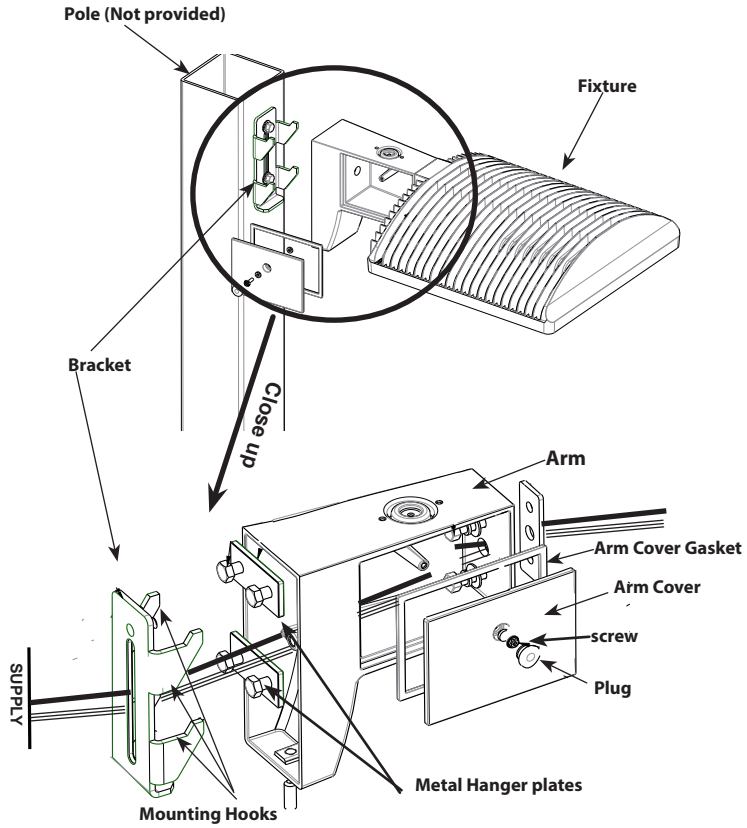

FIG.4

ON-OFF WIRING

Universal voltage driver permits operation at 120V thru 277V, 50 or 60 Hz. Units ordered with (/480V) suffix are 480V, 60Hz. For Non-Dimming, follow the wiring directions as in fig. 5

1. Connect the black fixture lead to the (+) LINE supply lead.
2. Connect the white fixture lead to the (-) COMMON supply lead.
3. Connect the GROUND wire from fixture to supply ground.

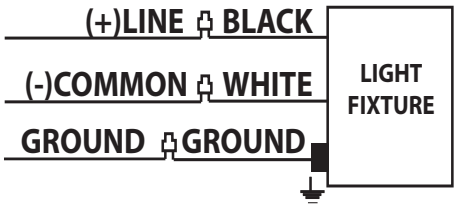

FIG.5

PHOTOCELL INSTALLATION

Wire the photocell as shown below.(Fig.6)

1. Remove close up plug on top of the wall mounting box.
2. Install photocell and wire as per diagram.
3. Use photocell rated for your supply voltage.

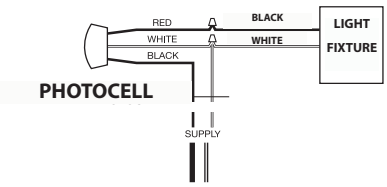

FIG.6

ALED® 50W -150W WITH UNIVERSAL ARM INSTRUCTIONS

Thank you for buying RAB lighting fixtures. Our goal is to design the best quality products to get the job done right. We'd like to hear your comments. Call the Marketing Department at 888-RAB-1000 or email: marketing@rabweb.com

0-10V DIMMABLE WIRING WITH WATTSTOPPER SENSOR

Universal voltage driver and Wattstopper Sensor permits operation at 120V thru 277V, 50 or 60 Hz. For 0-10V Dimming with Wattstopper, follow the wiring directions (Fig.7)

1. Connect the black fixture lead to the LOAD of Wattstopper Sensor.
2. Connect LINE of Wattstopper Sensor to LINE supply lead.
3. Connect the white fixture lead and NEUTRAL of Wattstopper Sensor to the COMMON supply lead.
4. Connect the GROUND wire from fixture and Wattstopper Sensor to supply ground. Do NOT connect the GROUND of the dimming fixture to the output.
5. Connect the purple fixture lead to DIM + of Wattstopper Sensor.
6. Connect the gray fixture lead to the DIM - of Wattstopper Sensor lead.
7. Cap the yellow fixture lead, if present. Do NOT connect.

DIMMABLE WIRING DIAGRAM

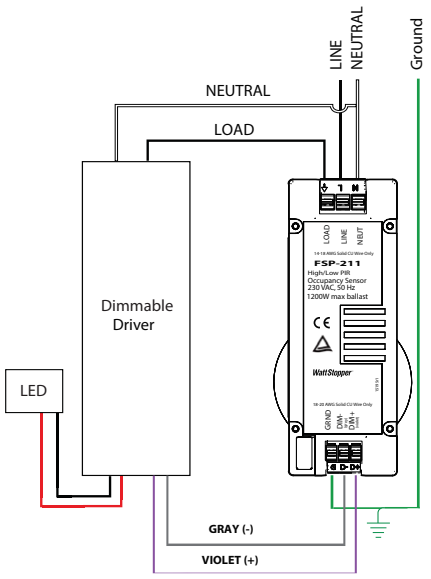

FIG.7

CLEANING & MAINTENANCE

CAUTION: Be sure fixture temperature is cool enough to touch. Do not clean or maintain while fixture is energized.

1. Clean glass lens with non-abrasive glass cleaning solution.
2. Do not open fixture to clean the LED. Do not touch the LED.

TROUBLESHOOTING

1. Check that the line voltage at the fixture is correct. Refer to wiring directions.
2. Be sure the fixture is grounded properly.
3. Is the photocell, if used, functioning properly?

ACCESSORIES

- **LALED150**-Door Lens replacement
  Avaiable in Bronze, (W)White, (RG)Gray
- **GOALED150W**-Wire Guard
  Available in (G)Grey

POLE DRILLING DETAIL

Dimensions of the holes on RPA and Bracket.

This template is not to scale. Please use measurements shown in Fig.8.

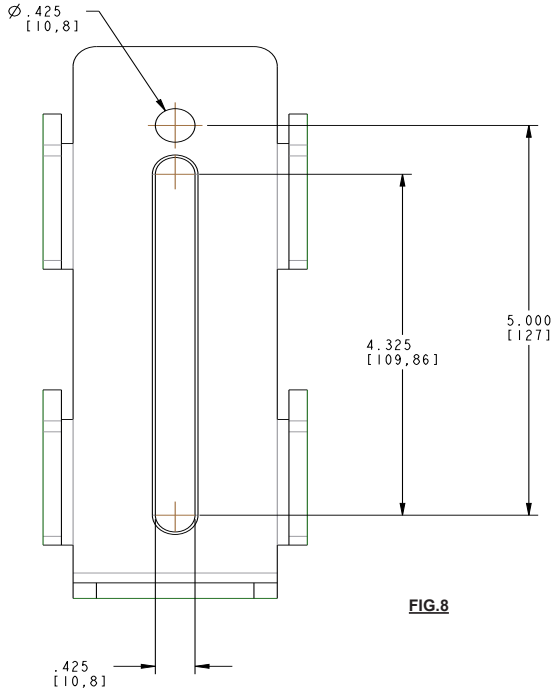

FIG.8

Patent: US: pat. D668,370

Note: These instructions do not cover all details or variations in equipment nor do they provide for every possible situation during installation, operation or maintenance.

RAB LIGHTING
© 2017 RAB LIGHTING Inc.
Northvale, New Jersey 07647 USA
ALED IN 0717

Easy Answers

rabweb.com	Tech Help Line	e-mail	Free Lighting Layouts
Visit our website for product info	Call our experts - 888 722-1000	Answered promptly - sales@rabweb.com	Answered online or by request

ALED® SLIPFITTER 50W 78W 105W 125W 150W INSTRUCTIONS

Thank you for buying RAB lighting fixtures. Our goal is to design the best quality products to get the job done right. We'd like to hear your comments. Call the Marketing Department at 888-RAB-1000 or email: marketing@rabweb.com

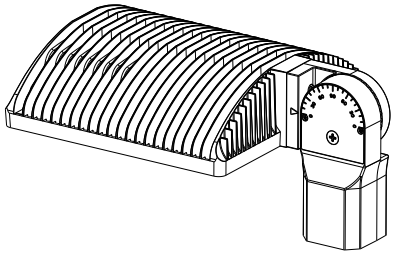

IMPORTANT

READ CAREFULLY BEFORE INSTALLING FIXTURE. RETAIN THESE INSTRUCTIONS FOR FUTURE REFERENCE.

RAB fixtures must be wired in accordance with the National Electrical Code and all applicable local codes. Proper grounding is required for safety. THIS PRODUCT MUST BE INSTALLED IN ACCORDANCE WITH THE APPLICABLE INSTALLATION CODE BY A PERSON FAMILIAR WITH THE CONSTRUCTION AND OPERATION OF THE PRODUCT AND THE HAZARDS INVOLVED.

WARNING: Make certain power is OFF before installing or maintaining fixture. No user serviceable parts inside.

MOUNTING FIXTURE

1. The **Slipfitter** fits a 2 3/8" O.D. **Tenon**. Place the slipfitter over the tenon and secure the fixture with 2 **Set Screws** on the side of the slipfitter.

2. Feed wires from **Fixture** through slipfitter and supply wires from **Pole**. Make the necessary connections in the slipfitter and knot wires for strain relief.

3. To adjust the angle of the slipfitter, remove 2 **screws** and remove the **Slipfitter Cover Plate.** Loosen the **Locking Bolt** and swivel fixture to desired angle. The graduation on the slipfitter cover plate can be used as guidelines to adjust the angle.

4. Tighten the **Locking Bolt.** Replace slipfitter cover plate**.** Tighten **Screws** and close the **Plug.**

5. Seal **Plug** using Teflon tape or silicone sealant.

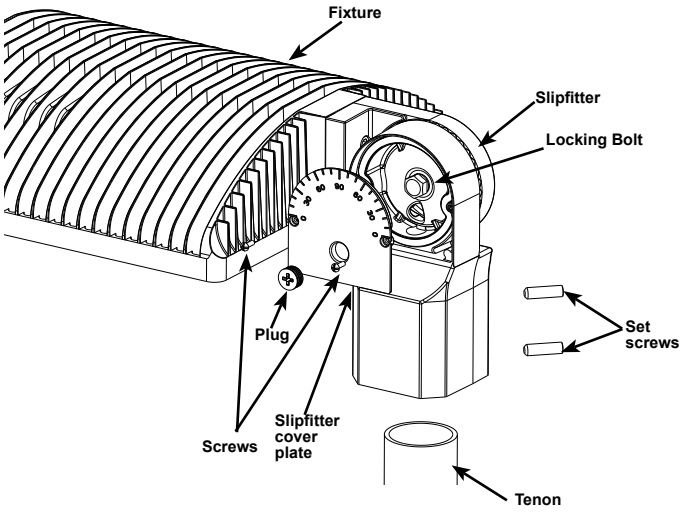

CLEANING & MAINTENANCE

CAUTION: Be sure fixture temperature is cool enough to touch. Do not clean or maintain while fixture is energized.

1. Clean glass lens with non-abrasive glass cleaning solution.
2. Do not open fixture to clean the LED. Do not touch the LED.

TROUBLESHOOTING

1. Check that the line voltage at fixture is correct. Refer to wiring directions.
2. Is the fixture grounded properly?
3. Is the photocell functioning properly (if used)?

ALED® SLIPFITTER 50W 78W 105W 125W 150W INSTRUCTIONS

Thank you for buying RAB lighting fixtures. Our goal is to design the best quality products to get the job done right. We'd like to hear your comments. Call the Marketing Department at 888-RAB-1000 or email: marketing@rabweb.com

ON-OFF WIRING

Universal voltage driver permits operation at 120V thru 277V, 50 or 60 Hz. Units ordered with (/480V) suffix are 480V, 60Hz. For Non-Dimming, follow the wiring directions as in fig. 1.

1. Connect the black fixture lead to the (+) LINE supply lead.
2. Connect the white fixture lead to the (-) COMMON supply lead.
3. Connect the GROUND wire from fixture to supply ground.

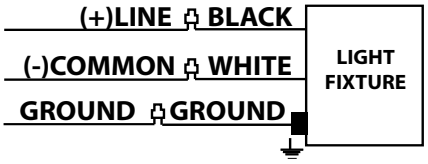

Fig. 1

PHOTOCELL INSTALLATION

Photocell may be installed in the field. Apply weatherproof silicone sealant to all plugs and unused conduit entries.

1. Remove close up plug on top of the wall mounting box.
2. Install photocell and wire as per diagram.
3. Use photocell rated for your supply voltage.

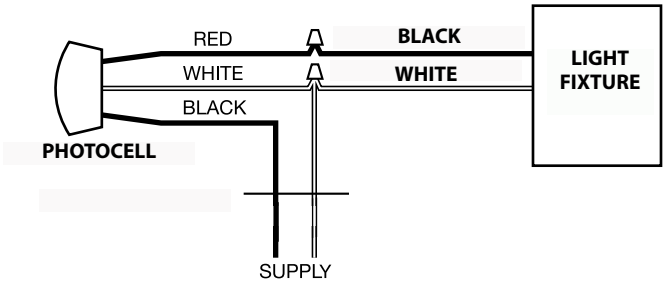

0-10V DIMMABLE WIRING

Universal voltage driver permits operation at 120V thru 277V, 50 or 60 Hz. For 0-10V Dimming, follow the wiring directions as in fig. 2.

1. Connect the black fixture lead to the (+) LINE supply lead.
2. Connect the white fixture lead to the (-) COMMON supply lead.
3. Connect the GROUND wire from fixture to supply ground. Do NOT connect the GROUND of the dimming fixture to the output.
4. Connect the purple fixture lead to the (V+) DIM lead.
5. Connect the gray fixture lead to the (V-) DIM lead.
6. Cap the yellow fixture lead, if present. Do NOT connect.

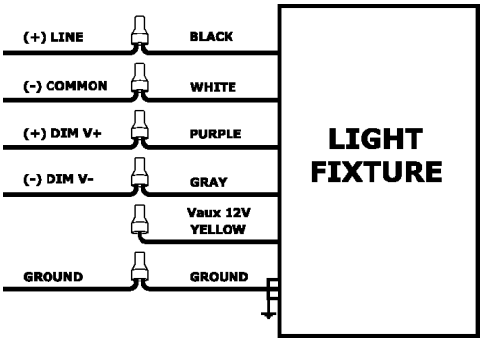

Fig. 2

RAB fixture designs are protected under U.S. and International Intellectual Property laws.
Patents: **US:** pat. D587,839; **CN**: ZL200830272893.0; **MX:** 28396, **TW**: pat. 96304793-U02; CA: (D) RAB Lighting, Inc

Note: These instructions do not cover all details or variations in equipment nor do they provide for every possible situation during installation, operation or maintenance.

©2013 RAB LIGHTING Inc.
Northvale, New Jersey 07647 USA

ALEDSF IN 0114

Easy Installation & Product Help

Tech Help Line
Call our experts 888 RAB-1000

rabweb.com
Visit our website for product info

email
Answered promptly sales@rabweb.com

ALED® 260W 360W INSTALLATION INSTRUCTIONS

Thank you for buying RAB lighting fixtures. Our goal is to design the best quality products to get the job done right. We'd like to hear your comments. Call the Marketing Department at 888-RAB-1000 or email: marketing@rabweb.com

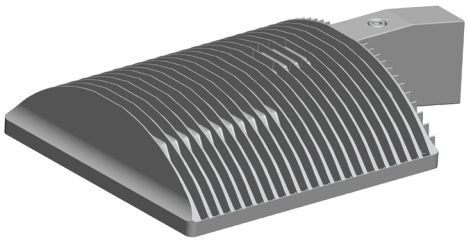

ALED260/ 360

IMPORTANT

READ CAREFULLY BEFORE INSTALLING FIXTURE. RETAIN THESE INSTRUCTIONS FOR FUTURE REFERENCE.

RAB fixtures must be wired in accordance with the National Electrical Code and all applicable local codes. Proper grounding is required for safety. This product must be installed in accordance with the applicable installation code by a person familiar with the construction and operation of the product and the hazards involved.

WARNING: Make certain power is OFF before installing or maintaining fixture. No user serviceable parts inside.

CAUTION: The fixture weighs 80lbs. Make sure pole and hardware supplied by others (if any) can withstand the weight of the fixture.

MOUNTING ARM ON FIXTURE

1. Remove the **Arm Cover** from the **Arm**.
2. Feed wires from **Fixture** through **Gasket** into **Arm**.
3. Line up **Arm** and **Fixture**. Place flat washers, lock washers and nuts on the **Short 3/8-16 bolts** inside the **Arm** and tighten securely to housing.
4. Make sure the **Gasket** is secure between **Arm** and **Fixture**.

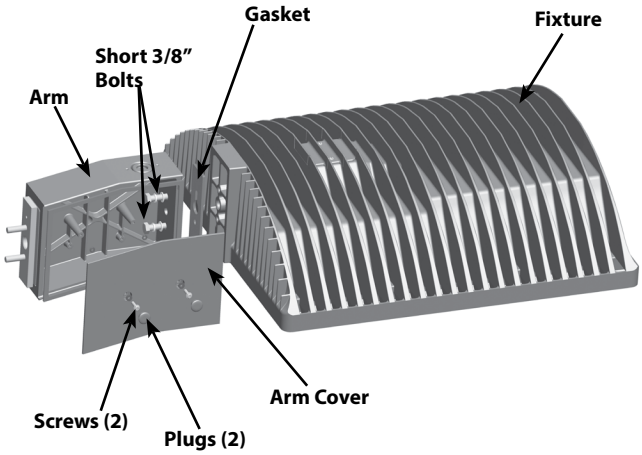

MOUNTING FIXTURE DIRECTLY TO POLE

Check that pole is drilled according to Pole Drawing Detail.

1. Remove the **Arm Cover** from the **Arm**.
2. Feed wires from **Fixture** through **Gasket** into **Arm**. Feed supply wires from **Pole** through **Gasket** into **Arm**.
3. Insert **Long 3/8-16 bolts** through **Arm, Gasket, Pole** and thread into the **Bolster Plate**. Be sure the **Gasket** is between the **Arm** and pole and secure with bolts, washers and lockwashers.
4. Make necessary connections inside the **Arm** and knot wires for strain relief.
5. Replace the **Arm Cover**. Be sure the **Gasket** on **Arm Cover** is in place. Tighten **Screws** and add the **Plugs**. Secure **Pole cap**.

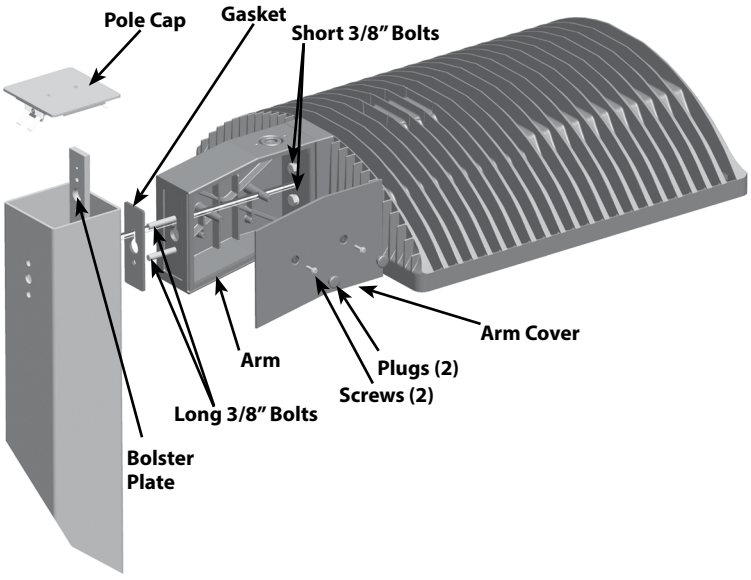

ALED® 260W 360W INSTALLATION INSTRUCTIONS

Thank you for buying RAB lighting fixtures. Our goal is to design the best quality products to get the job done right. We'd like to hear your comments. Call the Marketing Department at 888-RAB-1000 or email: marketing@rabweb.com

ROUND POLE ADAPTOR ACCESSORY

For use with standard RAB pole drilling.

1. Drill round pole using the dimensions shown in the Pole Drilling Detail.
2. Place **Round Pole Adaptor/ RPA (Ordered separately)** and **RPA Gasket** between the fixture and drilled **Pole** as shown.
3. Line up top holes of the **Gaskets** and **Round Pole Adaptor** with top hole in the pole drilling pattern.
4. Place **long 3/8" Bolts** from the **ALED** through the top hole of the RPA and Gaskets to the Round **Pole** thread into **Bolster Plate**.
5. Feed wires from **Fixture** through **Gasket** into **Arm**. Feed supply wires from **Pole** through **Gasket** into **Arm**. Make necessary connections inside the **Arm** and knot wires for strain relief.
6. Replace the **Arm Cover**, tighten **Screws** and add the **Plugs**. Secure Pole cap.

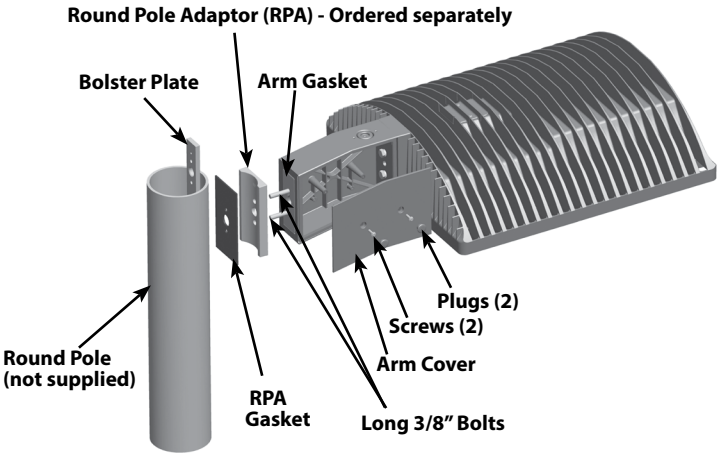

0-10V DIMMABLE WIRING

Universal voltage driver permits operation at 120V thru 277V, 50 or 60 Hz. 0-10V control wires must be rated for 300V minimum. Units ordered with (/480) suffix are 480V, 50 or 60Hz. For 0-10V Dimming, follow the wiring directions as shown in figure below.

1. Connect the black fixture lead to the LINE supply lead.
2. Connect the white fixture lead to the COMMON supply lead.
3. Connect the GROUND wire from fixture to supply ground. Do NOT connect the GROUND of the dimming fixture to the output.
4. Connect the purple fixture lead to the (V+) DIM lead.
5. Connect the gray fixture lead to the (V-) DIM lead.
6. Cap the yellow fixture lead, if present. Do NOT connect.

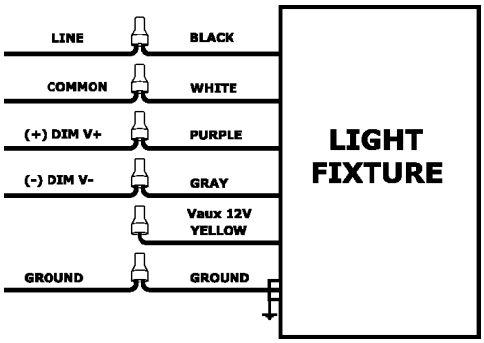

PHOTOCELL INSTALLATION

Photocell may be installed in the field. Apply weatherproof silicone sealant to all plugs and unused conduit entries.

1. Knockout hole on top of arm.
2. Install photocell and wire as per diagram.
3. Use photocell rated for your supply voltage.

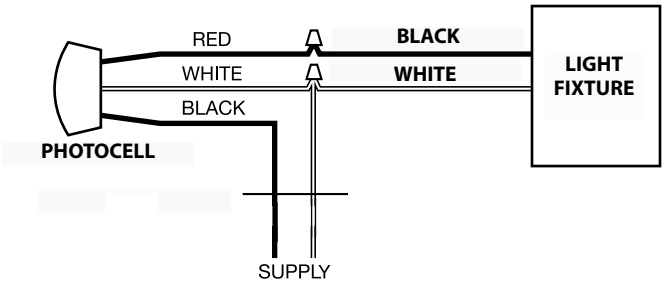

ALED® 260W 360W INSTALLATION INSTRUCTIONS

Thank you for buying RAB lighting fixtures. Our goal is to design the best quality products to get the job done right. We'd like to hear your comments. Call the Marketing Department at 888-RAB-1000 or email: marketing@rabweb.com

POLE DRILLING DETAIL

For non-RAB poles use these dimensions to drill the pole. This template is not to scale. Please use measurements shown.

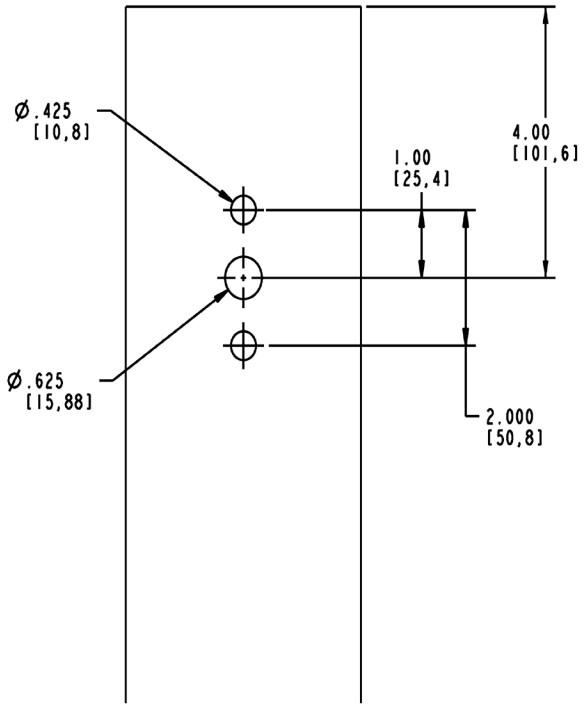

CLEANING & MAINTENANCE

CAUTION: Be sure fixture temperature is cool enough to touch. Do not clean or maintain while fixture is energized.

1. Clean glass lens with non-abrasive glass cleaning solution.
2. Do not open fixture to clean the LED. Do not touch the LED.

TROUBLESHOOTING

1. Check that the line voltage at the fixture is correct. Refer to wiring directions.
2. Be sure the fixture is grounded properly.
3. Is the photocell, if used, functioning properly?

Patent: US: pat. D668,370

Note: These instructions do not cover all details or variations in equipment nor do they provide for every possible situation during installation, operation or maintenance.

©2016 RAB LIGHTING Inc.
Northvale, New Jersey 07647 USA

Easy Installation & Product Help

Tech Help Line
Call our experts 888 RAB-1000

rabweb.com
Visit our website for product info

email
Answered promptly sales@rabweb.com

ALED® SLIPFITTER 260W 360W INSTRUCTIONS

Thank you for buying RAB lighting fixtures. Our goal is to design the best quality products to get the job done right. We'd like to hear your comments. Call the Marketing Department at 888-RAB-1000 or email: marketing@rabweb.com

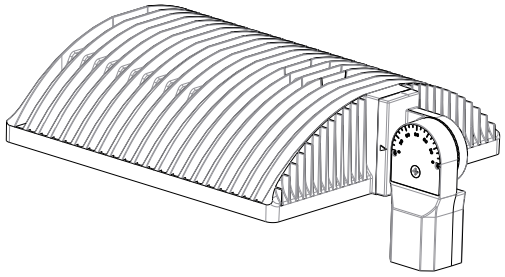

ALED260/ 360 with Slipfitter

IMPORTANT

READ CAREFULLY BEFORE INSTALLING FIXTURE. RETAIN THESE INSTRUCTIONS FOR FUTURE REFERENCE.

RAB fixtures must be wired in accordance with the National Electrical Code and all applicable local codes. Proper grounding is required for safety. This product must be installed in accordance with the applicable installation code by a person familiar with the construction and operation of the product and the hazards involved.

WARNING: Make certain power is OFF before installing or maintaining fixture. No user serviceable parts inside.

CAUTION: The fixture weighs 80lbs. Make sure pole and hardware supplied by others (if any) can withstand the weight of the fixture.

MOUNTING FIXTURE

1. The **Slipfitter** fits a 2 3/8" O.D. **Tenon**. Place the slipfitter over the **Tenon** and secure the fixture with **Set Screws (2)** on the side of the **Slipfitter**.
2. Feed wires from **Fixture** through **Slipfitter** and supply wires from pole (not supplied). Make the necessary connections in the **Slipfitter** and knot wires for strain relief.
3. To adjust the angle of the **Slipfitter**, remove **Screws (2)** and remove the **Slipfitter Cover Plate.** Loosen the **Locking Bolt** and swivel fixture to desired angle. The graduation on the **Slipfitter Cover Plate** can be used as guidelines to adjust the angle.
4. Tighten the **Locking Bolt.** Replace **Slipfitter Cover Plate.** Tighten **Screws**.
5. Apply weatherproof silicone sealant and tighten **Plug.**

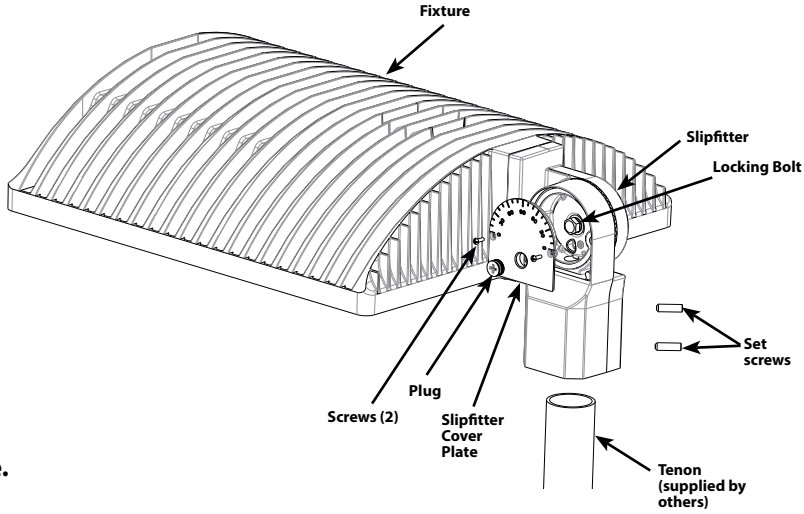

ALED® SLIPFITTER 260W 360W INSTRUCTIONS

Thank you for buying RAB lighting fixtures. Our goal is to design the best quality products to get the job done right. We'd like to hear your comments. Call the Marketing Department at 888-RAB-1000 or email: marketing@rabweb.com

0-10V DIMMABLE WIRING

Universal voltage driver permits operation at 120V thru 277V, 50 or 60 Hz. 0-10V control wires must be rated for 300V minimum. Units ordered with (/480) suffix are 480V, 50 or 60Hz. For 0-10V Dimming, follow the wiring directions as shown in figure below.

1. Connect the black fixture lead to the LINE supply lead.
2. Connect the white fixture lead to the COMMON supply lead.
3. Connect the GROUND wire from fixture to supply ground. Do NOT connect the GROUND of the dimming fixture to the output.
4. Connect the purple fixture lead to the (V+) DIM lead.
5. Connect the gray fixture lead to the (V-) DIM lead.
6. Cap the yellow fixture lead, if present. Do NOT connect.

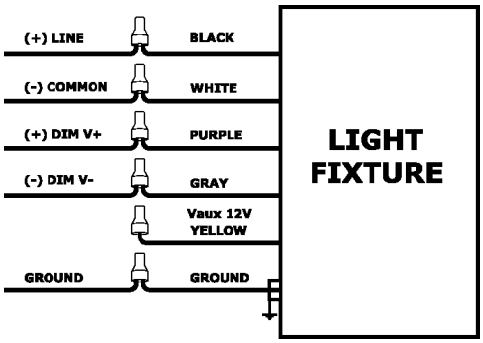

CLEANING & MAINTENANCE

CAUTION: Be sure fixture temperature is cool enough to touch. Do not clean or maintain while fixture is energized.

1. Clean glass lens with non-abrasive glass cleaning solution.
2. Do not open fixture to clean the LED. Do not touch the LED.

TROUBLESHOOTING

1. Check that the line voltage at the fixture is correct. Refer to wiring directions.
2. Be sure the fixture is grounded properly.
3. Is the photocell, if used, functioning properly?

Patent: US: pat. D668,370

Note: These instructions do not cover all details or variations in equipment nor do they provide for every possible situation during installation, operation or maintenance.

©2016 RAB LIGHTING Inc.
Northvale, New Jersey 07647 USA

Easy Installation & Product Help

Tech Help Line
Call our experts 888 RAB-1000

rabweb.com
Visit our website for product info

email
Answered promptly sales@rabweb.com

Welcome



Lightcloud™ Touch

LCTOUCH10

WE'RE HERE TO HELP:

1 (844) LIGHTCLOUD

1 (844) 544-4825

support@lightcloud.com

Hello

Lightcloud is a wireless lighting control service. The Lightcloud Touch is a wall-mounted 10" touchscreen tablet that gives users a convenient and customizable interface for controlling a Lightcloud site.

Product Features

AC-powered for permanent installation

Customizable zone and scene control

Direct local control for minimum latency

Easy setup from your computer or mobile device—or just call RAB

Patent Pending

Contents

Lightcloud Touch

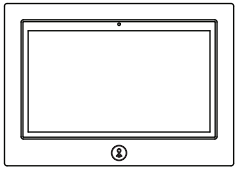

Instruction Manual

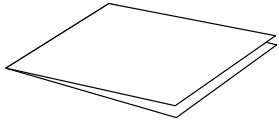

Six #6-18 x 1” Drywall Screws



Specifications

PART NUMBER
LCTOUCH10

INPUT
120VAC, 0.3-0.15A, 50/60Hz

OPERATING TEMPERATURE
0°C to 40°C

MAXIMUM RELATIVE HUMIDITY
90%

OVERALL DIMENSIONS
11” x 7.8” x 2.3”

WIRELESS RANGE

Line of Sight	1000 feet
Obstructions	100 feet

Indoor Rated.

What You Need

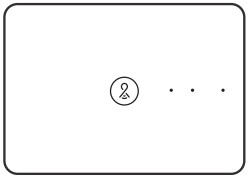

Lightcloud Gateway

A Lightcloud installation requires at least one Lightcloud Gateway to manage your devices.

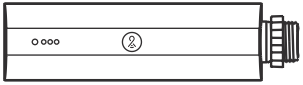

Lightcloud Controller

(Or similar Lightcloud actuation device)

WE'RE HERE TO HELP:

1 (844) LIGHTCLOUD

1 (844) 544-4825

support@lightcloud.com

Finding a Suitable Location

Lightcloud uses a wireless mesh network to connect devices such as the Dimmer to the Gateway. Unlike a WiFi router, each Lightcloud device may connect another device to the network. If there is a clear line of sight between two Lightcloud devices, they can be placed up to 1000 feet apart. If the two devices are separated by ordinary drywall construction, try to keep them within 100 feet of each other. Brick, concrete and steel construction may require additional AC-powered Lightcloud devices to go around the obstruction. See the Deployment section of your Gateway for more information.

Wiring

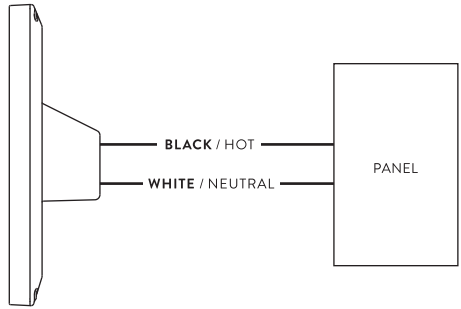

Setup & Installation

① Turn off power

⚠ WARNING

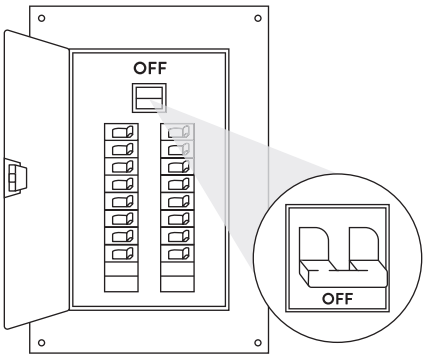

② Install the Touch

a. Choose a junction box at which to install the Touch, keeping in mind the guidelines from "Finding a Suitable Location".
b. Affix the bracket to the wall using the six #6-18 x 1" screws included.
c. Connect hot and neutral wires to the wires on the back of the Touch as shown in the “Wiring” section.
d. Hang the touch from the bracket.
e. Tighten bracket screws on bottom surface of device.

Setup & Installation (cont'd)

③ Labeling your device

For setup and maintenance, we provide two Lightcloud Device Tables with the Gateway: one that you can attach to your panel and one to hand off to a building manager. Attach the Device Identification stickers included with each device to a row, then write in additional information, such as Zone name, Panel/Circuit Number, and whether or not a zone uses dimming.

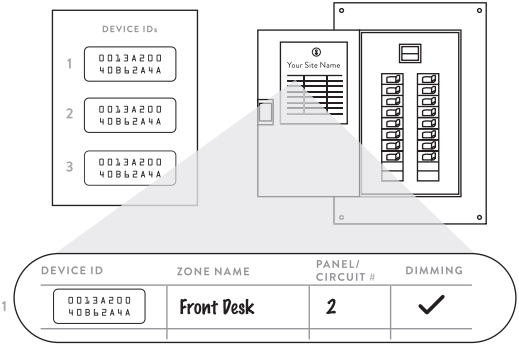

4 Enabling your device

4a Turn the Touch on by holding the power button on top.

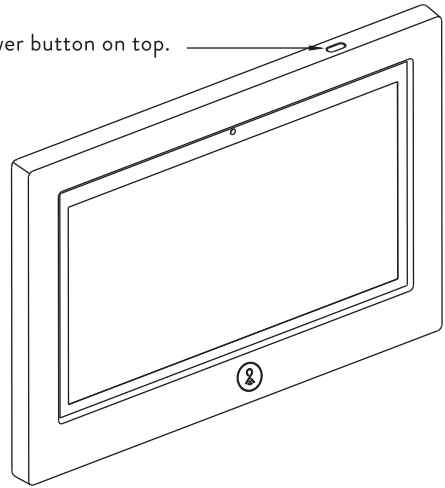

Setup & Installation (cont'd)

4 Enabling your device *(cont'd)*

4b Call RAB at 1 (844) LIGHTCLOUD, or email us at support@lightcloud.com, to add the Touch to your Lightcloud network.

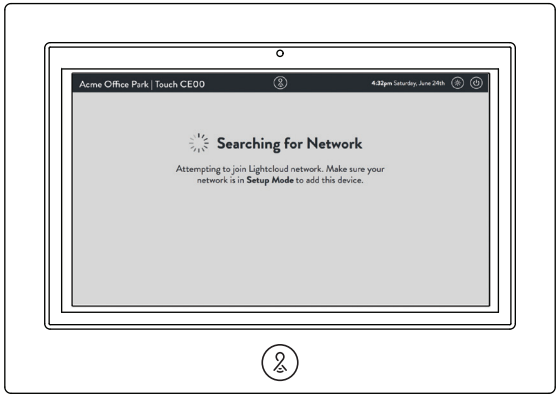

4c Once the Touch has joined your network, you'll see the screen below.

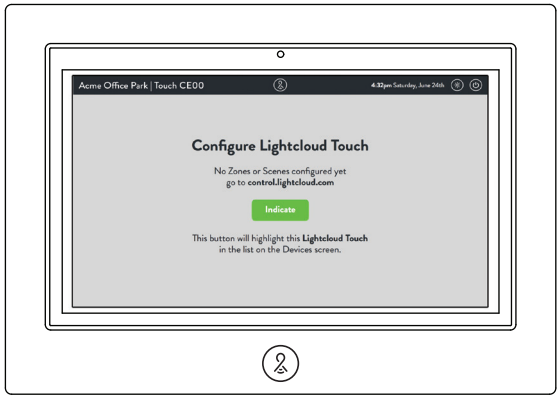

Functionality

Configure

All Lightcloud products can be commissioned and configured by:

- Logging on to lightcloud.com
- Calling RAB at 1 (844) LIGHTCLOUD
- Emailing us at support@lightcloud.com

1 Configuring the Touch by calling or emailing RAB

1 (844) LIGHTCLOUD
1 (844) 544-4825
support@lightcloud.com

2 Configuring the Touch using the web/mobile application

2a Navigate to https://control.lightcloud.com and log in.

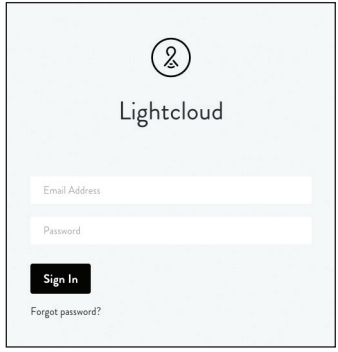

Functionality (cont'd)

② Configuring the Touch using the web/mobile application *(cont'd)*

2b Click the ☰ menu icon in the top left.

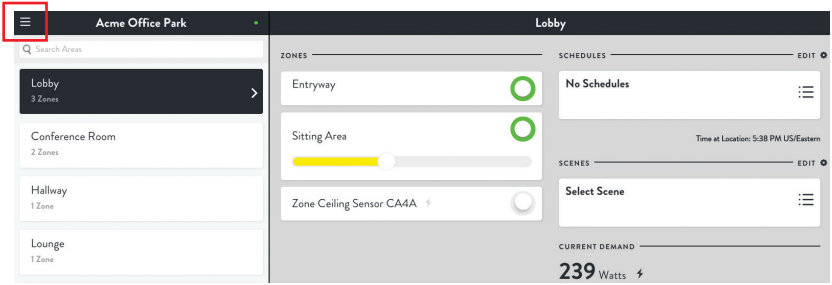

2c Navigate to your Site, then click Devices.

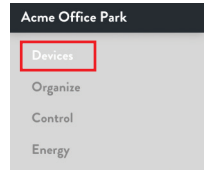

2d Find your Touch device in the Device List on the left

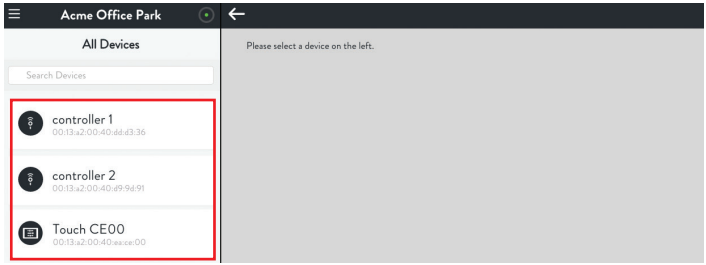

Functionality (cont'd)

② Configuring the Touch using the web/mobile application *(cont'd)*

2e Click the icon to add zone and/or scene controls to your Touch.

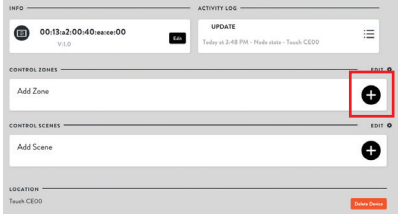

In this example, we've configured our Touch to control two zones and one scene:

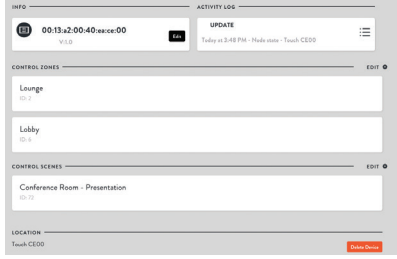

2f Within a few seconds, the tablet UI refreshes to reflect our changes.

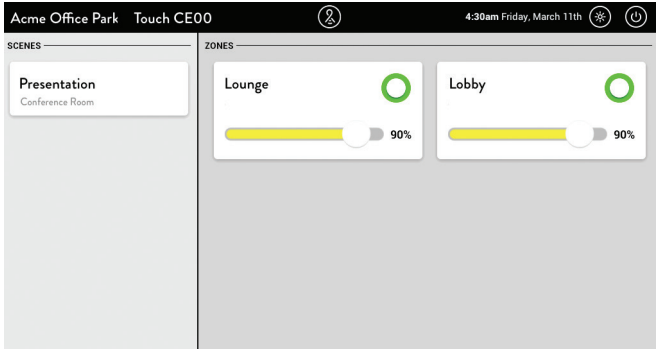

FCC Information:
This equipment has been tested and found to comply with the limits for a Class A digital device, pursuant to part 15 of the FCC Rules. These limits are designed to provide reasonable protection against harmful interference when the equipment is operated in a commercial environment. This equipment generates, uses, and can radiate radio frequency energy and, if not installed and used in accordance with the instruction manual, may cause harmful interference to radio communications. Operation of this equipment in a residential area is likely to cause harmful interference in which case the user will be required to correct the interference at his own expense.

These limits are designed to provide reasonable protection against harmful interference in a non-residential installation. However, there is no guarantee that interference will not occur in a particular installation. If this equipment does cause harmful interference with radio or television reception, which can be determined by turning the equipment off and on, you are encouraged to try to correct the interference by one or more of the following measures:
• Reorient or relocate the antenna.
• Increase the separation between this equipment and receiver.
• Connect the equipment into an outlet on a circuit different from that to which the receiver is connected.
• Consult the dealer or an experienced radio/TV technician for help.

To comply with FCC RF exposure limits for general population/uncontrolled exposure, this transmitter must be installed to provide a separation distance of at least 20cm from all persons and must not be co-located or operating in conjunction with any other antenna or transmitter.

CAUTION: Changes or modifications to this equipment not expressly approved by RAB Lighting, Inc. may void the user's authority to operate this equipment.



Lightcloud is a commercial wireless lighting control system & service. It's powerful and flexible, yet easy to use and install. Learn more at **lightcloud.com**

1 (844) LIGHTCLOUD

1 (844) 544-4825
support@lightcloud.com

RAB®

© RAB Lighting, Inc

170 Ludlow Avenue Northvale, NJ 07647
Custom manufactured in China

08/16

Lightcloud is a commercial wireless lighting control system & service. It's powerful and flexible, yet easy to use and install. Learn more at lightcloud.com

1 (844) LIGHTCLOUD
1 (844) 544-4825
support@lightcloud.com

RAB®

Custom manufactured in China

© RAB Lighting, Inc

170 Ludlow Avenue Northvale, NJ 07647

Welcome

Lightcloud™ Sensor

LCSENSE15/D10 (Ceiling Sensor)
LCHBSENSE15/D10 (High Bay Sensor)

WE'RE HERE TO HELP:

1 (844) LIGHTCLOUD
1 (844) 544-4825
support@lightcloud.com

Hello

Lightcloud is a wireless lighting control service. The Lightcloud Sensor is a remotely configurable passive infrared motion sensor that can switch and dim both hardwired circuits and remote circuits using Lightcloud Controllers.

Product Features

Advanced PIR Sensing

Secure Cloud Control & Configuration

Retrofit-Friendly Local Control

Scheduling & Astronomical Clock

Temperature Monitoring
Light Sensor

Power Monitoring

0-10V Dimming

Patent Pending

Contents

Lightcloud Ceiling Sensor or High Bay Sensor

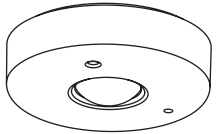

Wire Nuts

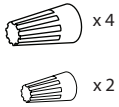

Instruction Manual

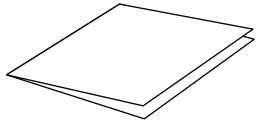

Accessories

For use with High Bay Sensor Only

Lens Cover for 180° Coverage (included)



Arm (optional, includes 2 screws and 1 locknut)



Height Adjuster (optional, must use in conjunction with Arm)

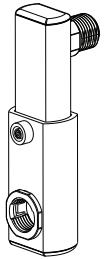

Specifications

Indoor Damp Location

PART NUMBER
LCSENSE15/D10 (Ceiling)
LCHBSENSE15/D10 (High Bay)

INPUT
120-277VAC, 50/60Hz,
<1W (Standby) - 2W (Active)

MAXIMUM SWITCHED LOAD RATINGS
Electronic Ballast: 277VAC, 3300W
Magnetic Ballast: 277VAC, 1200W / 120VAC, 800W
Tungsten: 220VAC, 3000W
Dimming: 0-10V (Class2)

OPERATING HUMIDITY
10% RH to 95% RH
Non-Condensing

OPERATING TEMPERATURE
-20°C to 40°C

OVERALL DIMENSIONS
4.91" Diameter, 1.61" Height

WIRELESS RANGE
Line-of-Sight: 1000 feet
Obstructions: 100 feet

Warranty is active as long as service plan is active.

What You Need

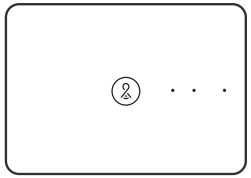

Lightcloud Gateway
A Lightcloud installation requires at least one Lightcloud Gateway to manage your devices.

Setup & Installation

1 Find a suitable location

Use these guidelines when installing devices:

- If there is a clear line of sight between two Lightcloud devices, they can be placed up to 1000 feet apart.
- If the two devices are separated by ordinary drywall construction, try to keep them within 100 feet of each other.
- Brick, concrete and steel construction may require additional Lightcloud devices to go around the obstruction.

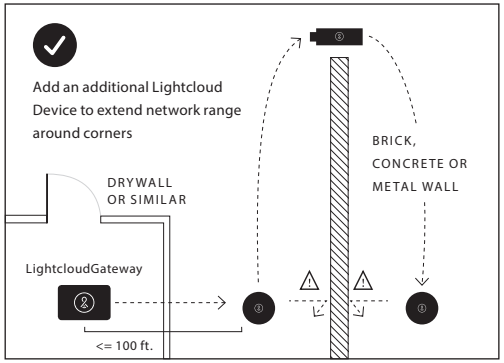

2 Install your Lightcloud Sensor

INSTALL AT A JUNCTION BOX (INDOOR/OUTDOOR)

The Sensor can control other Lightcloud devices, wirelessly. If you don't need to hard-wire a switched circuit to the Sensor, no problem—just tie the white/red wire to neutral and cap off any unused wires.

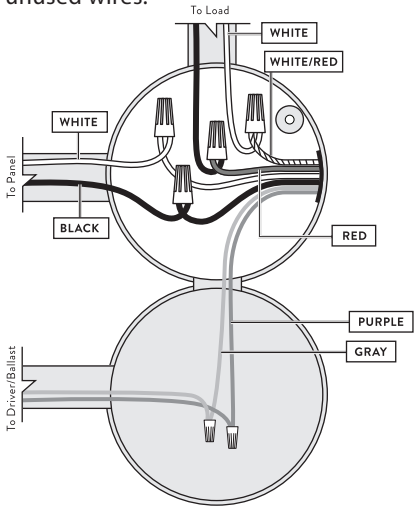

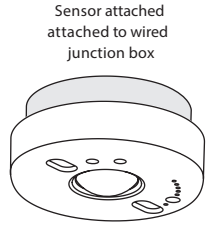

Setup & Installation (cont'd)

3 Installing Accessories (High Bay only)

Arm:

mount sensor to fixture using ½" NPS threaded nipple

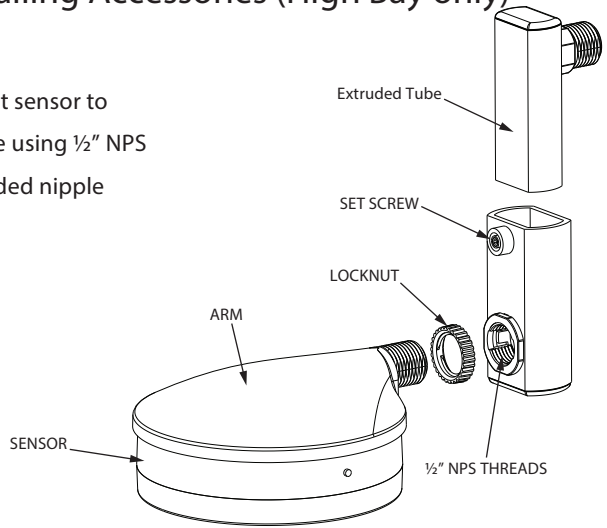

Height Adjuster:

adjust height by loosening set screw, moving sensor up or down along extruded tube, then tightening set screw. Ensure sensor lens is not blocked by any part of the fixture.

4 Wiring

SWITCHED NEUTRAL

The "Switched Neutral" white with red stripe wire is the neutral line for the load being switched. This enables power measurement. See the Power Measurement section under "Functionality" for more information.

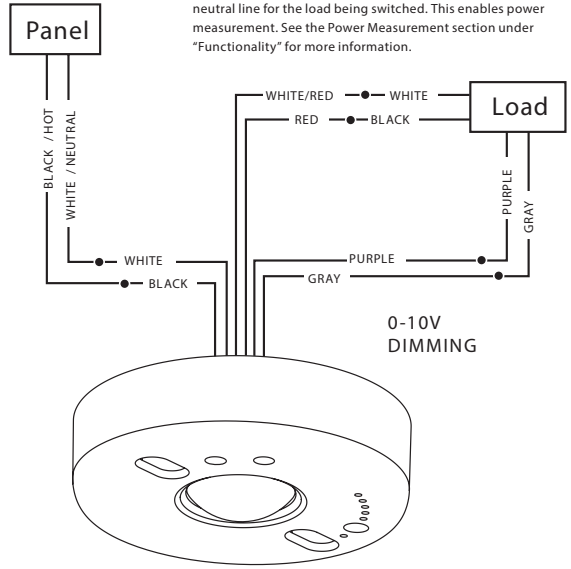

Any wires not in use must be capped off or otherwise insulated.

This product should only be installed by a qualified electrician and in compliance with local and national electrical codes.

Setup & Installation (cont'd)

5 Labeling your device

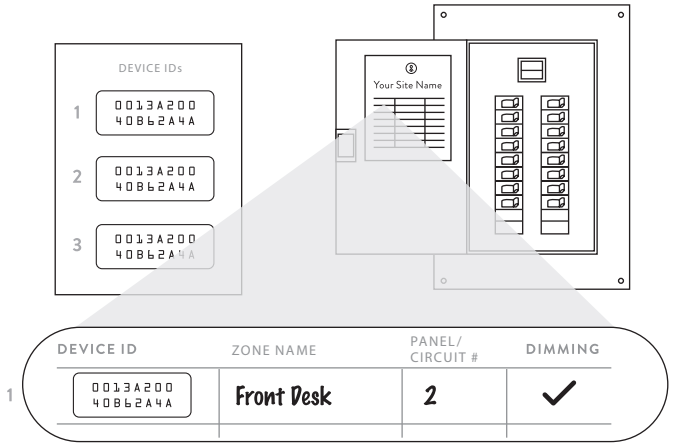

For setup and maintenance, we provide two Lightcloud Device Tables with the Gateway: one that you can attach to your panel and one to hand off to a building manager. Attach the Device Identification stickers included with each device to a row, then write in additional information, such as Zone name, Panel/Circuit Number, and whether or not a zone uses dimming.

6 Power up

To add new devices to your Lightcloud network, contact RAB:

WE'RE HERE TO HELP:

1 (844) LIGHTCLOUD

or 1 (844) 544-4825

support@lightcloud.com

7 Confirm device connectivity

Confirm status indicator LED (see step 8) is solid green. If it is not, make sure your device is within range of another Lightcloud AC-powered device.

Setup & Installation (cont'd)

8 Place cover

Secure cover onto sensor by pushing up and twisting to the right (clockwise).

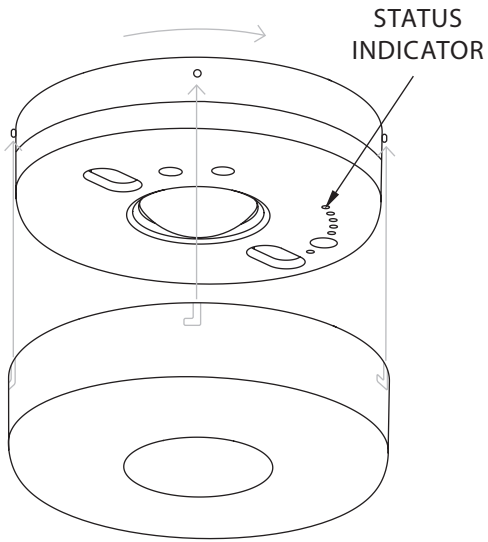

9 Commission & Configure Your Devices

All Lightcloud products can be commissioned and configured by:

- Logging on to lightcloud.com
- Calling RAB at 1 (844) LIGHTCLOUD
- Emailing us at support@lightcloud.com

Functionality

Overview

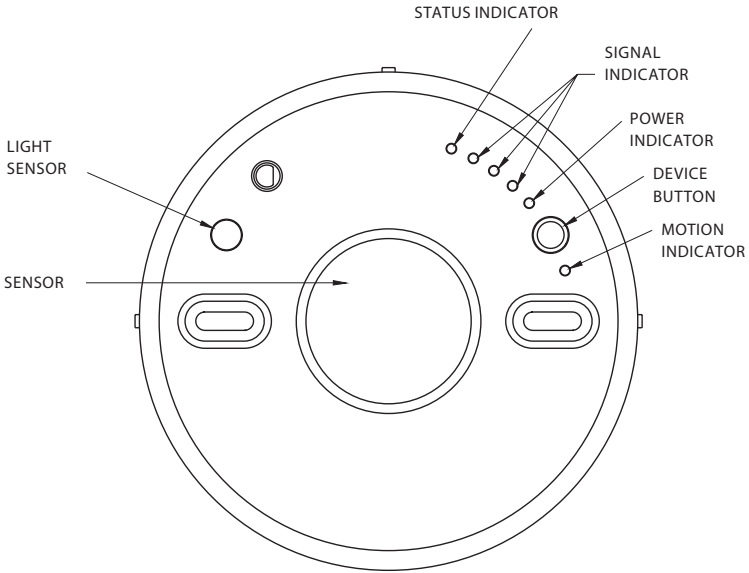

STATUS INDICATOR:

- Solid GREEN when connected to your Lightcloud network
- Blinking RED when not connected to a Lightcloud network. The device will automatically continue trying to connect to a network that is in Setup Mode.

POWER INDICATOR:

Illuminated when powered. Blinking when indicated from the Lightcloud application.

SIGNAL INDICATOR:

After the Device Button has been pressed, this indicator illuminates when the device receives a message and indicates the strength of the signal.
3 - Best Signal
2 - Acceptable Signal
1 - Unacceptable Signal
Consult the “Finding a Location” section for more information.

DEVICE BUTTON:

- Press once to highlight this device in the Lightcloud Application (pressing once also enables display of the Signal Indicators)
- Press twice to toggle circuit on and off
- Press twice and hold to set dim level
- Press and hold for 10 seconds to remove this device from a Lightcloud network

MOTION INDICATOR:

Illuminates when motion is detected

SENSOR:

Passive-infrared motion sensor

Functionality (cont'd)

Features: Passive Infrared Motion Detection

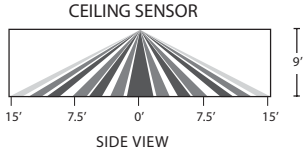

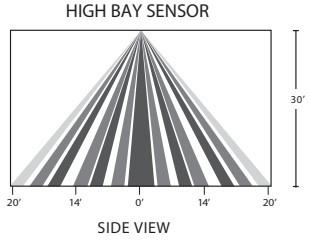

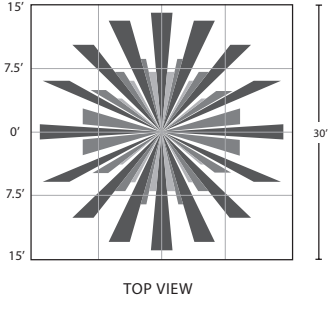

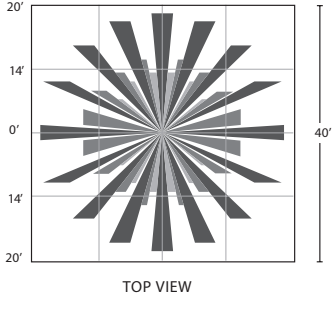

Features

OCCUPANCY & VACANCY SENSING:

The Lightcloud Sensor can operate in either Occupancy or Vacancy Sensor modes, selectable via the Lightcloud application. In Occupancy mode, the attached circuit will be switched on when motion is detected, and off (or dimmed) when the timeout expires. In Vacancy mode, the attached circuit will be turned off when the motion timeout expires, but will only be turned on via the Lightcloud application, Lightcloud Wall Switch, or similar. Motion detection and timeout can still be used via Lightcloud Automations to control other devices.

CONTROLLER MODE:

In Controller Mode, the attached circuit is controllable as an independent zone in the Lightcloud application. Motion detection and timeout can still be used via Lightcloud Automations to control other devices.

RANGE TEST MODE:

When Range Test Mode is activated via the Lightcloud application, the timeout period is shortened so that you can test different sensitivities quickly. All indicators will go off except for the Motion Indicator. When satisfied, turn off Range Test Mode to continue normal operation.

Functionality (cont'd)

Features

0-10V DIMMING:

0-10V is a common method of low-voltage control of dimmable drivers and ballasts.
Purple: 0-10V positive | Gray: 0-10V common
Note: The National Electrical Code requires that low-voltage wiring used in the same enclosure as high voltage wiring have an equal or better insulation rating. You may need to complete your low-voltage wiring in another enclosure or use a partition.

DEVICE IDENTIFICATION:

For help with installation, there are two ways to identify this device:

- Pressing the Device Button on the actual product will produce a message in the Lightcloud application indicating which device you are working with.
- Pressing the "Indicate" button in the Lightcloud application will cause the device's Status Indicator to blink green. This will also switch the device's relay on and off repeatedly, allowing you to quickly identify which circuit it is.

POWER MEASUREMENT:

The Lightcloud Sensor is capable of measuring the power usage of the attached circuit. In order to utilize this function, the neutral wire of the load must be connected to the white-red switched neutral wire. If this wire is not used, it should be tied to the regular neutral wire (i.e. all neutral wires joined).

POWER LOSS DETECTION:

If power to the Sensor is lost, the device will detect this and alert the Lightcloud application.

EMERGENCY DEFAULT:

If communication is lost, the Sensor may optionally fall back to a specific state, such as turning the attached circuit on. This may be configured via the Lightcloud application or by calling RAB.

FCC Information:
This device complies with Part 15 of the FCC Rules. Operation is subject to the following two conditions:
1. This device may not cause harmful interference, and
2. This device must accept any interference received, including interference that may cause undesired operation.

Note: This device has been tested and found to comply with the limits for Class B digital devices pursuant to Part 15 Subpart B, of the FCC rules. These limits are designed to provide reasonable protection against harmful interference in a residential environment. This equipment generates, uses, and can radiate radio frequency energy, and if not installed and used in accordance with the instruct manual, may cause harmful interference to radio communications. However, there is no guarantee that interference will not occur in a particular installation. If this equipment does cause harmful interference to radio or television reception, which can be determined b turning the equipment off and on, the user is encouraged to try and correct the interference by one or more of the following measure

- Reorient or relocate the receiving antenna.
- Increase the separation between the equipment and receiver.
- Connect the equipment into an outlet on a circuit different from that to which the receiver is connected.
- Consult the dealer or an experienced radio/TV technician for help.

To comply with the FCC's RF exposure limits for general population / uncontrolled exposure, this transmitter must be installed to provide a separation distance of at least 20 cm from all persons and must not be co-located or operating in conjunction with any other antenna or transmitter.

CAUTION: Changes or modifications to this equipment not expressly approved by RAB Lighting may void the user's authority to operate this equipment.

Lightcloud™

RAB®

Manual

Device Specifications

PART NUMBER

LCGATEWAY

ELECTRICAL

The Lightcloud Gateway is designed to be hard-wired to AC power by a qualified electrician.

INPUT

120-277 VAC, 50/60 Hz
60-45mA

BATTERY

Li-ion battery. Contact RAB only for replacement batteries.

CAUTION! RISK OF EXPLOSION IF BATTERY IS REPLACED BY AN INCORRECT TYPE. DISPOSE OF USED BATTERIES ACCORDING TO LOCAL LAWS.

Some communities offer recycling or collection of rechargeable batteries—contact your local government for disposal practices in your area.

DISCONNECT

An external readily accessible disconnect device, such as a circuit breaker, is required.

Custom manufactured in China

Copyright © 2016 RAB Lighting, Inc.

Contents

5 **Introduction**
6 **System Overview**
7 **Lightcloud Gateway**
8 **Lightcloud Devices**

9 **Finding a Suitable Location**
10 Best Practices
11 Best Practices
12 Getting Started

13 **Installation**
14 Lightcloud Gateway
17 Lightcloud Devices & Table

18 **Setup**
18 Network Setup
18 Gateway Activation
18 Lightcloud Devices

Welcome to lighting control that just works.

Lightcloud is a cloud-based wireless lighting control system that makes it easy to take charge of your lighting—from sensing to dimming, schedules to scenes, and everything in between. Control and configure your system remotely using the Lightcloud Application, or call RAB to have our experts set up your system just how you need it.

System Overview

An individual Lightcloud installation, or Site, requires at least one Lightcloud Gateway depending on the environment and usage. Your Lightcloud devices communicate with each other and the Gateway via a wireless mesh network, which allows site layout to be flexible and robust.

The Lightcloud Gateway and Devices require a subscription to function beyond the installation period. Call RAB at **1 (844) LIGHTCLOUD** or visit lightcloud.com to set up your account. Your Lightcloud subscription gets you these state-of-the-art features:

- Online control & configuration at control.lightcloud.com
- Device commissioning
- Free support
- Telephone concierge
- Energy monitoring

Lightcloud Gateway

The Gateway connects your system to our secure, private server via a cellular signal, so you don't have to worry about providing your own internet connection. With the Gateway powered and connected, your Lightcloud site is at your command with the Lightcloud Application. For maximum security, the Gateway isn't exposed to the internet at all, and for maximum reliability, the Gateway contains an Uninterruptible Power Supply (UPS) that will maintain power for up to 2 hours. When the Gateway is not powered or available, switching devices such as the Controller will fall back to a configurable emergency mode, such as turning on to full brightness.

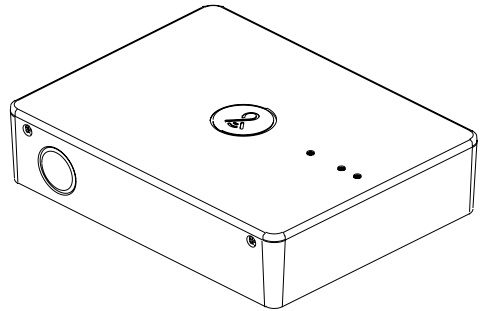

Lightcloud Devices

LIGHTCLOUD DEVICES THAT CONNECT TO THE GATEWAY

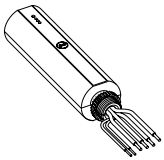

Lightcloud Controller

The Controller switches circuits up to 20A as well as provides a 0-10V dimming interface for dimmable drivers and ballasts.

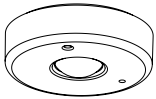

Lightcloud Ceiling Sensor

The Ceiling Sensor is an intelligent passive infrared motion sensor that can be configured for both occupancy and vacancy sensing. Switches up to 15A and provides 0-10V dimming.

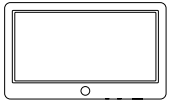

Lightcloud Daylight

The Daylight is an innovative, self-powered daylight harvesting sensor that measures available light and adjusts your lighting automatically.

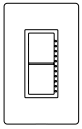

Lightcloud Dimmer

The Wall Dimmer puts advanced control at your fingertip. Configure via the Lightcloud App to switch & dim a zone or change scenes.

Learn more about Lightcloud Devices at lightcloud.com

Finding a Suitable Location

The Gateway should be installed in a dry or non-condensing damp environment only.

Use these guidelines when installing additional Lightcloud devices:

- If there is a clear line of sight between two devices, they can be placed up to 1000 feet apart.
- If the two devices are separated by ordinary drywall construction, try to keep them within 100 feet of each other.
- Brick, concrete and steel construction may require additional devices to go around the obstruction.

Best Practices

Unlike an ordinary WiFi router, where all devices must be within range of the router, hardwired Lightcloud devices extend the range of the network—so as long as each device is within range of another, you'll have a strong, reliable system.

NOTE: *Lightcloud Daylight devices do not extend the range of a Lightcloud network.*

PROBLEM MATERIALS

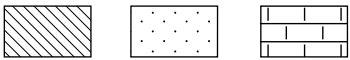

Large amounts of metal, concrete and brick are bad news for radio signals; in some cases, you'll have to go around these obstacles with additional AC-powered Lightcloud devices.

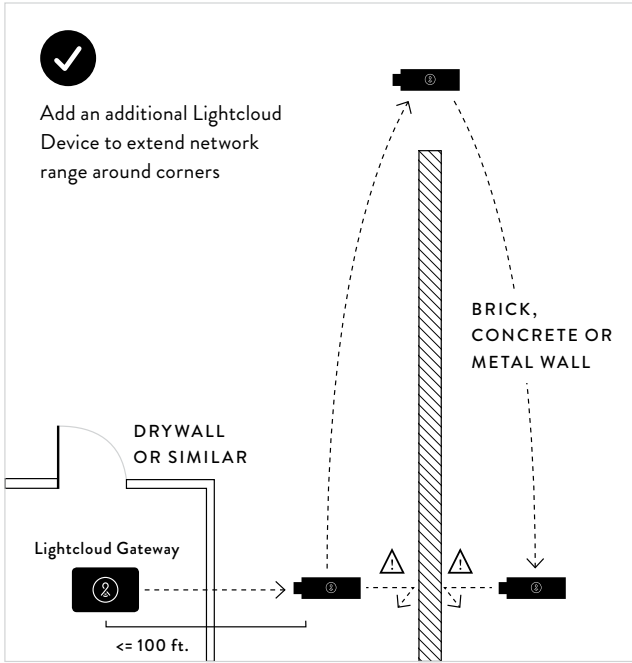

Best Practices (Continued)

Lastly, consider sources of invisible interference. Avoid placing Lightcloud devices near microwaves, motors (especially elevator mechanical rooms) or any other radio amplifiers and antennas.

PROBLEM DEVICES & SIGNALS

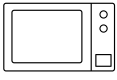

MICROWAVES

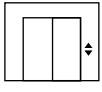

ELEVATOR MECHANICAL ROOMS



AMPLIFIERS & ANTENNAS

Getting Started

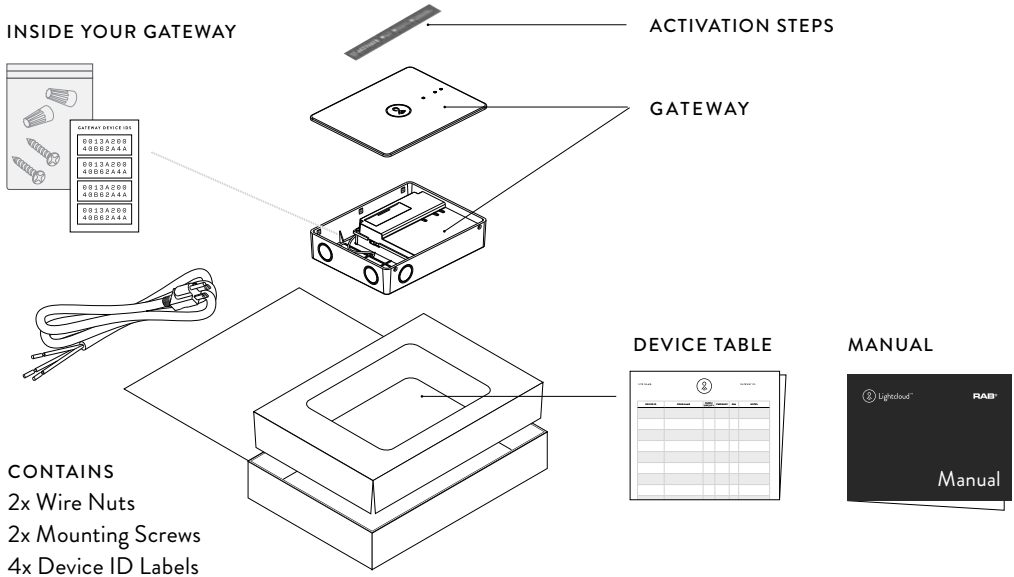

**The Lightcloud Gateway must be mains powered for permanent installation. Power cord including for testing cellular signal strength at different locations in a facility.*

Installation

The Lightcloud Gateway is rated 120-277VAC and contains an integral junction box for hard-wired installation by a qualified electrician.

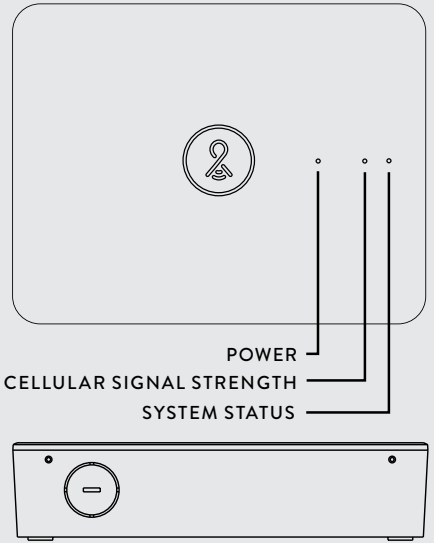

LED Indicators

POWER

Green: Fully powered

CELLULAR

Off: No or poor cellular signal. You must move the Gateway to a location with better cellular signal.
Solid Yellow: Adequate cellular signal. This signal strength works for most applications, but if possible, move to a location with better signal.
Solid Green: Good cellular signal.

SYSTEM STATUS

Blinking Yellow: Initializing
Solid Yellow: Error: Cannot reach Lightcloud service. Check Cellular Signal Strength and call RAB for technical support.
Blinking Green: Ready to connect with new Lightcloud devices
Solid Green: Normal operation

Installing the Lightcloud Gateway

Follow instructions and steps to successfully install your Gateway.

1 STEP ONE

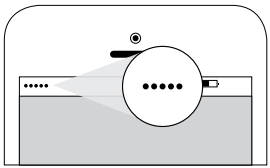

Choose a location with good cellular signal. Check your phone's signal for reference.

NOTE: *Locations with significant concrete and brick construction, or underground locations, are not recommended.* ***Do not install inside metal enclosures.***

2 STEP TWO

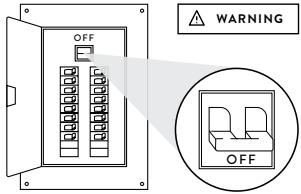

Turn off the breaker and prepare the circuit you'll use to power the Gateway. A dedicated circuit is recommended.

3 STEP THREE

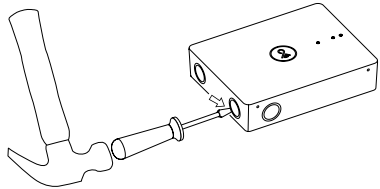

Remove a knockout (KO) from the Gateway using a flat-blade screwdriver and hammer. Place the screwdriver blade at the edge of the KO, then tap the screwdriver with the hammer to weaken the attachment. Work your way around the edge of the KO until it breaks away.

4 STEP FOUR

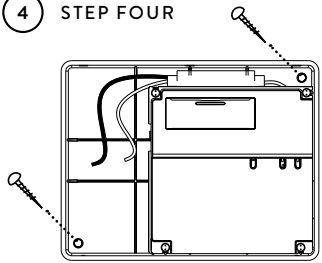

Mount the Gateway to the installation surface using size 10 screws appropriate for the surface material. For direct installation onto an external junction box, use the junction box's included screws.

NOTE: *Conduit must be used to connect to side knockouts.*

5 STEP FIVE

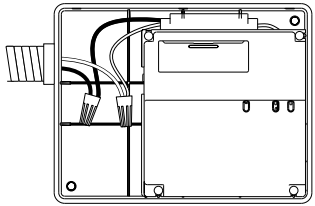

Install included battery with negative (-) end facing towards junction box area. Call RAB to request replacement rechargeable batteries. Use RAB-provided batteries only.

Connect hot and neutral wires with included wire nuts.

6 STEP SIX

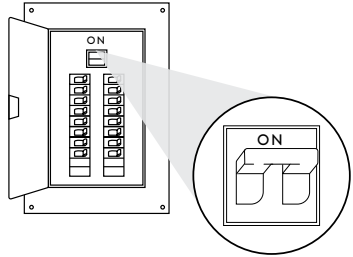

Turn breaker back on.

Installing Lightcloud Gateway (Continued)

7 STEP SEVEN

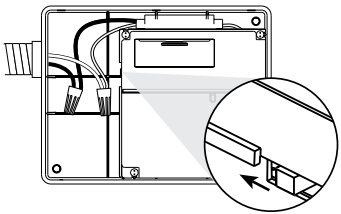

Turn on the Gateway main power switch. Replace outer cover and use included screws to secure.

When all devices are installed and powered, you're ready to call RAB to activate and verify your system, and complete your site's configuration.

NOTE: *Use only RAB-authorized parts.*

8 STEP EIGHT

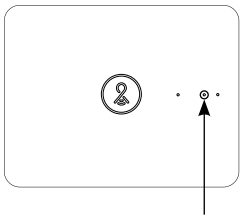

Confirm that the cellular signal strength LED is yellow or green. If the Gateway is powered but this LED is not lit, relocate the Gateway to an area with better reception.

You can use the included power cable to easily test the signal strength in a few locations, but remember that the Gateway must be hardwired for permanent installation.

9 STEP NINE

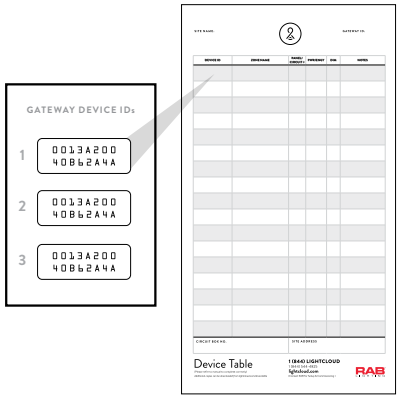

Place extra Device ID stickers on your Lightcloud Device Table *(see page 18)* for future reference.

For each device, find the number from the panel board and write it down on the Device Table.

Lightcloud Devices

Lightcloud devices that are mains hard-wired powered are designed to be installed on a junction box or similar enclosure, and must be installed by a qualified electrician. Refer to your device's manual for installation considerations and best practices.

TIP: *Use extra Device ID stickers on or near your devices or circuits for easier identification.*

Lightcloud Device Table

The Device Table is essential for referencing during setup or for troubleshooting—don't forget it! Two copies are provided: one to keep near your Gateway, and one for the building owner or facility manager to file.

IN THE BOX



MOUNT IT

Mount device table to breaker box.

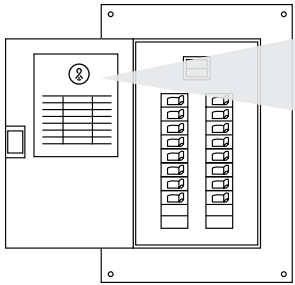

HOW TO USE IT

Place Gateway ID sticker at the top.

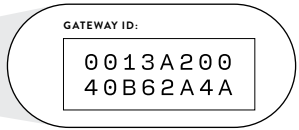

PWR/ENGY: if a zone uses the Controller's integrated power monitoring, place a checkmark.

DIM: if a zone uses the Controller's 0-10V dimming wires, place a checkmark here.

Setup

Gateway Activation

When you power your Gateway and it shows sufficient cellular signal (solid yellow or green LED), call **1 (844) LIGHTCLOUD** or 1 (844) 544-4825 to activate it and complete the rest of your site setup.

Network Setup

To add new devices to your Lightcloud network, call RAB at **1 (844) LIGHTCLOUD.**

Software Setup

Lightcloud is cloud-based—no software to install or maintain, ever. Once you have a Lightcloud account, you can login to lightcloud.com at any time to configure and control your system.

Full Service

Need to change something about your system? No need to log in—RAB can do it for you! Call **1 (844) LIGHTCLOUD** and our support specialists will get you where you want to be.

FCC Information:

This device complies with Part 15 of the FCC Rules. Operation is subject to the following two conditions:

1. This device may not cause harmful interference, and

2. This device must accept any interference received, including interference that may cause undesired operation.

Note: This device has been tested and found to comply with the limits for Class B digital devices pursuant to Part 15 Subpart B, of the FCC rules. These limits are designed to provide reasonable protection against harmful interference in a residential environment. This equipment generates, uses, and can radiate radio frequency energy, and if not installed and used in accordance with the instruction manual, may cause harmful interference to radio communications. However, there is no guarantee that interference will not occur in a particular installation. If this equipment does cause harmful interference to radio or television reception, which can be determined by turning the equipment off and on, the user is encouraged to try and correct the interference by one or more of the following measures:

- Reorient or relocate the receiving antenna.

- Increase the separation between the equipment and receiver.

- Connect the equipment into an outlet on a circuit different from that to which the receiver is connected.

- Consult the dealer or an experienced radio/TV technician for help.

To comply with the FCC's RF exposure limits for general population / uncontrolled exposure, this transmitter must be installed to provide a separation distance of at least 20 cm from all persons and must not be co-located or operating in conjunction with any other antenna or transmitter.

CAUTION: Changes or modifications to this equipment not expressly approved by RAB Lighting may void the user's authority to operate this equipment.

Lightcloud is a commercial wireless lighting control system & service. It's powerful and flexible, yet easy to use and install. Learn more at **lightcloud.com**

1 (844) LIGHTCLOUD
1 (844) 544-4825

RAB®

© RAB Lighting, Inc

170 Ludlow Avenue Northvale, NJ 07647
Custom manufactured in China

Welcome

Lightcloud™

Dimmer

LCDIMMERW

WE'RE HERE TO HELP:

1 (844) LIGHTCLOUD

or 1 (844) 544-4825

Hello

Lightcloud is a wireless lighting control service. The Lightcloud Dimmer is an in-wall switch that connects wirelessly to a Lightcloud Controller to provide switching, dimming and scene control.

Product Features

Wireless Control & Configuration

Zone Switching & Dimming

Dim Level Indicator

Scene Selection

Nightlight

Contents

Dimmer

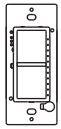

Faceplate

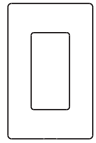

Faceplate Bracket

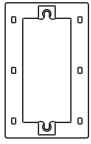

Instruction Manual

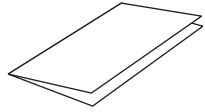

2x 6-32 1/2" Screws



2x 6-32 5/16" Screws



Specifications

PART NUMBER
LCDIMMER/W

INPUT
120-277VAC, 50/60Hz, 2W

OPERATING TEMPERATURE
0°C to 40°C

DIMENSIONS
Dimmer: 1.77"W x 2.7"H x 1.49"D
Faceplate: 2.94"W x 4.69"H x 0.06"D
Faceplace Bracket: 2.8"W x 4.55"H x 0.13"D

18AWG grounding; terminals supporting up to 12AWG wire

WIRELESS RANGE
Line-of-Sight: 1000 feet
Obstructions: 100 feet

What You Need

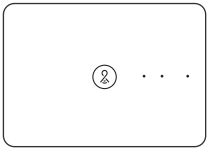

A Lightcloud Gateway

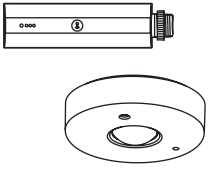

A Ceiling Sensor
(Or similar actuator)

WE'RE HERE TO HELP:

1 (844) LIGHTCLOUD

or 1 (844) 544-4825

Wiring

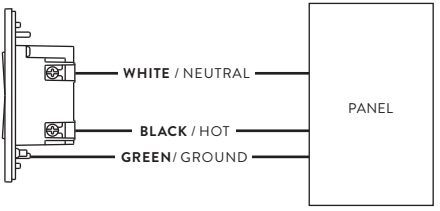

CAUTION

- Use only copper wire.
- Do not operate with the faceplate removed.
- This product should only be installed by a qualified electrician and in compliance with local and national electrical codes.
- This product should only be installed in a UL-approved single gang wall-box enclosure.
- Indoor use only.

Finding a suitable location

Lightcloud uses a wireless mesh network to connect devices such as the Dimmer to the Gateway. Unlike a WiFi router, each Lightcloud device may connect another device to the network. If there is a clear line of sight between two Lightcloud devices, they can be placed up to 1000 feet apart. If the two devices are separated by ordinary drywall construction, try to keep them within 100 feet of each other. Brick, concrete and steel construction may require additional AC-powered Lightcloud devices to go around the obstruction. See the Deployment section of your Gateway for more information.

Setup & Installation

(1) Turn off power

⚠ WARNING

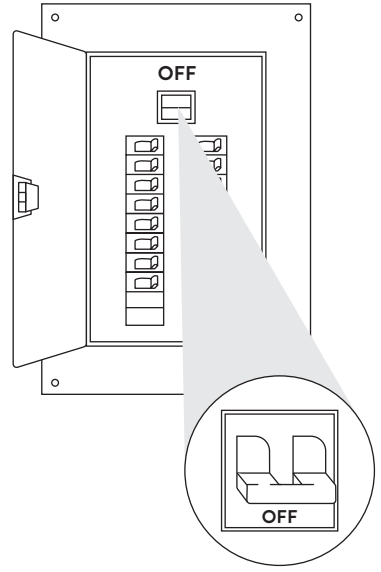

Setup & Installation (cont'd)

(2) Install the Lightcloud Dimmer

2a Screw the line (black) and neutral (white) wires into the labeled connectors on the back of the Dimmer. Connect the ground wire (green).

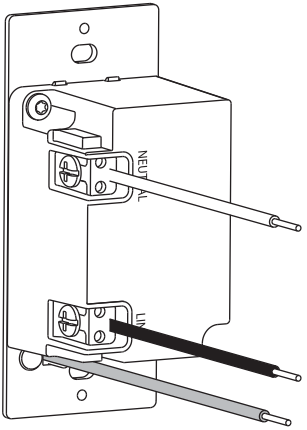

2b Use the two 6-32 1/2" Phillips round head screws to secure the Dimmer to the junction box.

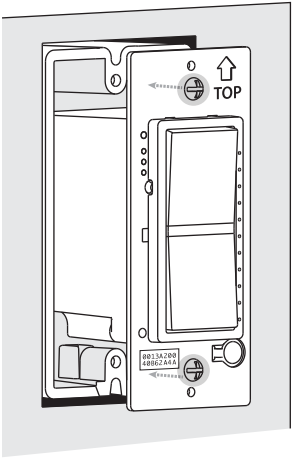

Make sure the arrow labeled "TOP" is pointing up.

Setup & Installation (cont'd)

② Install the Lightcloud Dimmer *(cont'd)*

2c Use the two 6-32 5/16" Phillips flat-head screws provided to secure the faceplate bracket to the Dimmer.

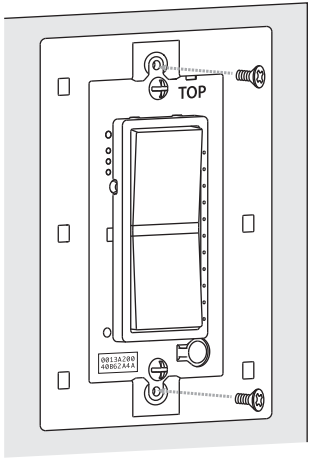

2d Snap the faceplate onto the faceplate bracket.

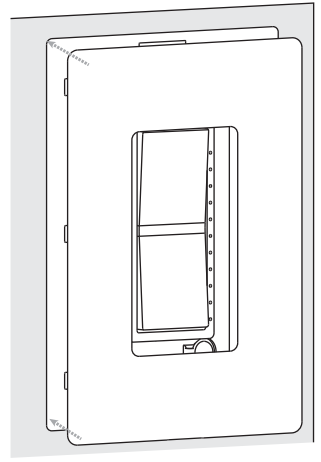

Setup & Installation (cont'd)

③ Labeling your device

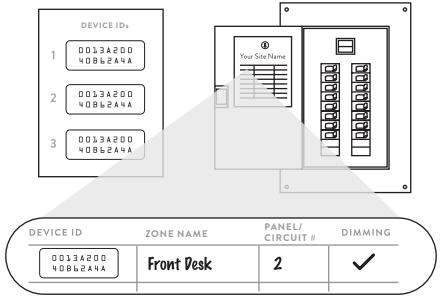

For setup and maintenance, we provide two Lightcloud Device Tables with the Gateway: one that you can attach to your panel and one to hand off to a building manager. Attach the Device Identification stickers included with each device to a row, then write in additional information, such as Zone name, Panel/Circuit Number, and whether or not a zone uses dimming.

④ Power up

To add your Lightcloud Dimmer to your system, enable Setup Mode via the Lightcloud application or call RAB at 1 (844) 544-4825. When the Dimmer powers up, it will automatically try to join, and keep trying until it is able to join.

If you are installing multiple devices, you may wait until they are all installed to enable Setup Mode.

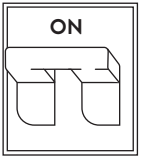

When all devices have been commissioned, remember to disable Setup Mode.

⑤ Confirm device connectivity

Confirm Network Status Indicator is solid green (see details below).

Functionality

Configuration

To pair the Dimmer with a zone, assign scenes or perform other configuration, use the Lightcloud web application or call RAB:

WE'RE HERE TO HELP:

1 (844) LIGHTCLOUD

or 1 (844) 544-4825

Overview

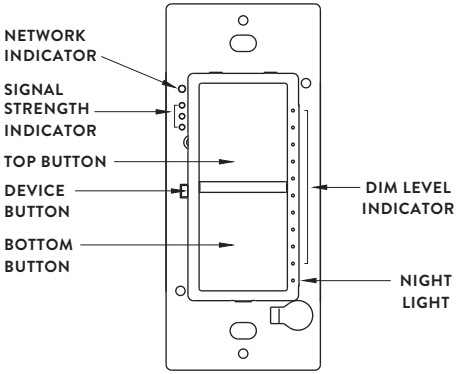

DEVICE BUTTON *(press using paperclip)*:

- **Single press:** Indicate in Lightcloud application
- **Hold for 10 seconds:** Force device to leave current Lightcloud network

DIM LEVEL INDICATOR:

- Displays current dim level (Zone mode)

NIGHTLIGHT:

- **White:** Lit when zone is off so you can find the dimmer

SIGNAL STRENGTH INDICATOR:

- Indicates strength of the connection to next Lightcloud Device

NETWORK INDICATOR:

- **Solid green:** Connected to a Lightcloud network
- **Blinking red:** Not connected to a Lightcloud network

The network and signal strength indicators are lit for 10 minutes following initial power on. To display the indicators later on, simply press the device button once.

TOP AND BOTTOM BUTTONS:

Functionality depends on which mode is being used; see next page for details.

Functionality (cont'd)

Features

The Lightcloud Dimmer can be used in Switch Mode, Dimmer Mode or Scene Mode. To switch between these modes and access other configuration options, use the Lightcloud web application, or call RAB at 1-844-LIGHTCLOUD.

SWITCH MODE: In Switch Mode, the Dimmer is paired with a specific zone to provide switching.

Top and Bottom Buttons:

- **Single Press:** Switch zone on/off

DIMMER MODE: Dimmer Mode takes Switch Mode and adds dimming capabilities.

Top Button:

- **Single press while zone is off:** switch zone on.
- **Single press while zone is on:** dim up to max gradually, stopping at current position if bottom button is pressed.
- **Press and hold while zone is on:** dim up gradually, release to set dim level.

Bottom Button:

- **Single press while zone is on:** switch zone off.
- **Press and hold while zone is on:** dim down gradually, release to set dim level.

SCENE MODE: In Scene Mode, the top and bottom buttons activate preselected scenes. This can be configured using the Lightcloud web application or by calling RAB.

FCC Information:

This device complies with Part 15 of the FCC Rules. Operation is subject to the following two conditions:

1. This device may not cause harmful interference, and

2. This device must accept any interference received, including interference that may cause undesired operation.

Note: This device has been tested and found to comply with the limits for Class B digital devices pursuant to Part 15 Subpart B, of the FCC rules. These limits are designed to provide reasonable protection against harmful interference in a residential environment. This equipment generates, uses, and can radiate radio frequency energy, and if not installed and used in accordance with the instruction manual, may cause harmful interference to radio communications. However, there is no guarantee that interference will not occur in a particular installation. If this equipment does cause harmful interference to radio or television reception, which can be determined by turning the equipment off and on, the user is encouraged to try and correct the interference by one or more of the following measures:

- *Reorient or relocate the receiving antenna.*
- *Increase the separation between the equipment and receiver.*
- *Connect the equipment into an outlet on a circuit different from that to which the receiver is connected.*
- *Consult the dealer or an experienced radio/TV technician for help.*

To comply with FCC RF exposure limits for general population/ uncontrolled exposure, this transmitter must be installed to provide a separation distance of at least 20cm from all persons and must not be co-located or operating in conjunction with any other antenna or transmitter.

CAUTION: Changes or modifications to this equipment not expressly approved by RAB Lighting, Inc. may void the user's authority to operate this equipment. Custom manufactured in China.

Lightcloud is a commercial wireless lighting control system & service. It's powerful and flexible, yet easy to use and install. Learn more at **lightcloud.com**

1 (844) LIGHTCLOUD
1 (844) 544-4825
support@lightcloud.com

RAB®

© RAB Lighting, Inc
170 Ludlow Avenue Northvale, NJ 07647
Custom manufactured in China

Welcome

Lightcloud™

Daylight

LCDAYLIGHT

WE'RE HERE TO HELP:

1 (844) LIGHTCLOUD
1 (844) 544-4825
support@lightcloud.com

FCC Information:
This device complies with Part 15 of the FCC Rules. Operation is subject to the following two conditions:
1. This device may not cause harmful interference, and
2. This device must accept any interference received, including interference that may cause undesired operation.

Note: This device has been tested and found to comply with the limits for Class B digital devices pursuant to Part 15 Subpart B, of the FCC rules. These limits are designed to provide reasonable protection against harmful interference in a residential environment. This equipment generates, uses, and can radiate radio frequency energy, and if not installed and used in accordance with the instruction manual, may cause harmful interference to radio communications. However, there is no guarantee that interference will not occur in a particular installation. If this equipment does cause harmful interference to radio or television reception, which can be determined
by turning the equipment off and on, the user is encouraged to try and correct the interference by one or more of the following measures:
• Reorient or relocate the receiving antenna.
• Increase the separation between the equipment and receiver.
• Connect the equipment into an outlet on a circuit different from that to which the receiver is connected.
• Consult the dealer or an experienced radio/TV technician for help.

To comply with FCC RF exposure limits for general population/uncontrolled exposure, this transmitter must be installed to provide a separation distance of at least 20cm from all persons and must not be co-located or operating in conjunction with any other antenna or transmitter.

CAUTION: Changes or modifications to this equipment not expressly approved by RAB Lighting, Inc. may void the user's authority to operate this equipment.

Hello

Lightcloud is a wireless lighting control service. The Lightcloud Daylight is a remote, self-powered, open-loop light sensor that can switch and dim Lightcloud Controllers and other Lightcloud devices.

Product Features

Wireless Sensing & Configuration

Ambient Light Sensor

Innovative Self-Powered Design

No Batteries

Patent Pending

Contents

Lightcloud Daylight

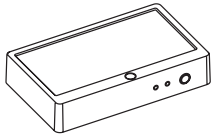

Instruction Manual

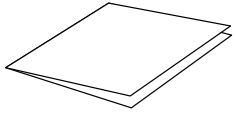

Mounting Screws



Straight & Angled Mounting Brackets

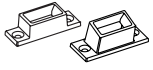

Power Supply for Setup

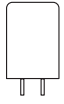

USB Cable for Setup

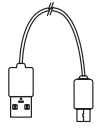

Specifications

PART NUMBER
LCDAYLIGHT

OPERATING TEMPERATURE
-10°C to 40°C

OPERATING HUMIDITY
10% RH to 95% RH

OVERALL DIMENSIONS
5.25" x 3.16" x 1"

USB POWER SPECIFICATIONS

Nominal Input Voltage	100-240VAC
Nominal Input Current	6mA
Nominal Power	0.2W
Frequency	47Hz-63Hz

Warranty is active as long as service plan is active.
Indoor Rated.

What You Need

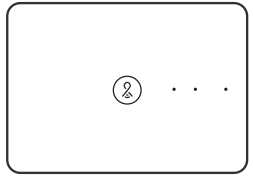

Lightcloud Gateway
A Lightcloud installation requires at least one Lightcloud Gateway to manage your devices.

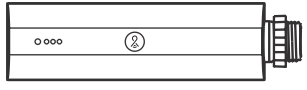

Lightcloud Controller
(Or similar Lightcloud actuation device)

The Daylight is designed to remotely control one or more Lightcloud devices that are capable of switching or dimming, such as the Lightcloud Controller or Ceiling Sensor.

WE'RE HERE TO HELP:

1 (844) LIGHTCLOUD

1 (844) 544-4825

support@lightcloud.com

Setup & Installation

1 Plug in the Daylight device (setup only)

To join your Daylight to a Lightcloud network, plug it in with the included Micro USB power adapter. The white Power Indicator will come on and the Device Status Indicator will blink red every 10 seconds until it is joined to your network. For setup purposes, you can plug the device in anywhere that's convenient, but please stay near the location where it will be permanently installed in order to ensure continued network connectivity. Once setup has been completed, you can unplug the device and it will operate exclusively on solar power—no batteries necessary.

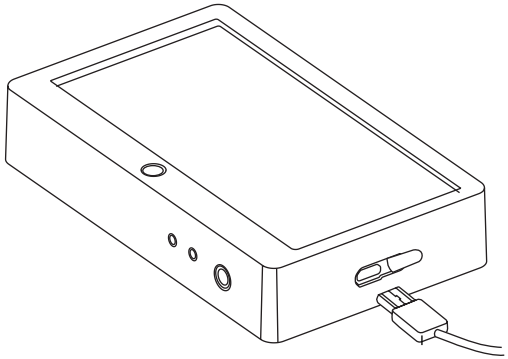

2 Contact RAB to add your Daylight

Call us at 1(844) LIGHTCLOUD or email support@lightcloud.com and we'll get your Daylight device added to your Lightcloud network immediately. When USB power is removed, it is normal for this LED to be unlit.

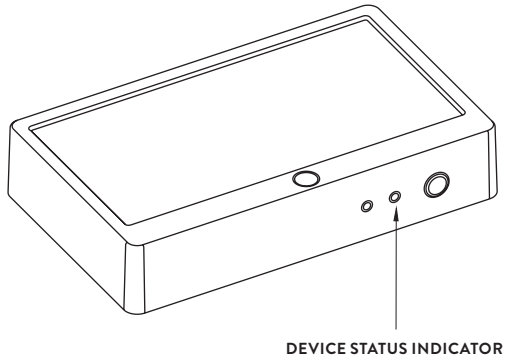

Setup & Installation (cont'd)

3 Find a Suitable Location

3a The Daylight needs sunlight to operate, and must be within range of another Lightcloud device. Direct sunlight is ideal, but indirect sunlight may be acceptable if there's enough of it.

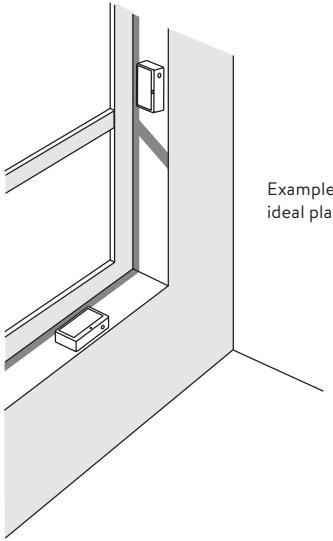

Example of ideal placements

3b A skylight is a great location for the Lightcloud Daylight. Be aware of where shadows will land throughout the day and position the device where it will receive the most direct sunlight.

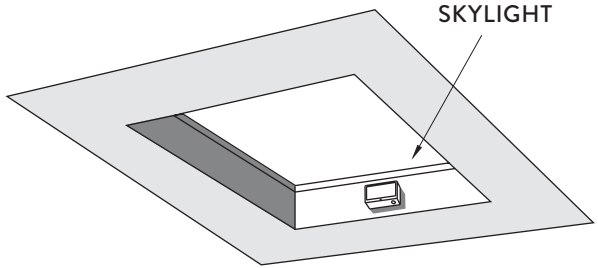

NOTE: Remember, south-facing surfaces usually receive more direct sunlight than north-facing surfaces.

Setup & Installation (cont'd)

3c The Daylight includes an angled mounting bracket that can be used to maximize the amount of sunlight landing on the device's face.

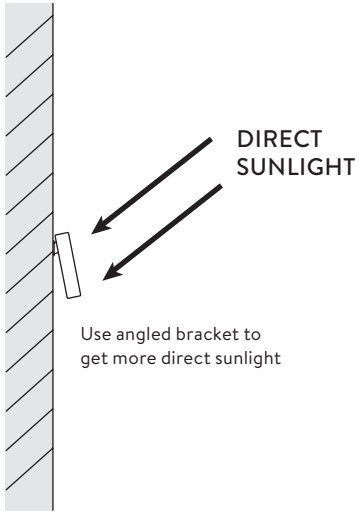

3d In some cases, you may want to use an extension of some kind (not included) to mount the device from the ceiling. Just be sure it ends up in direct sunlight as much as possible.

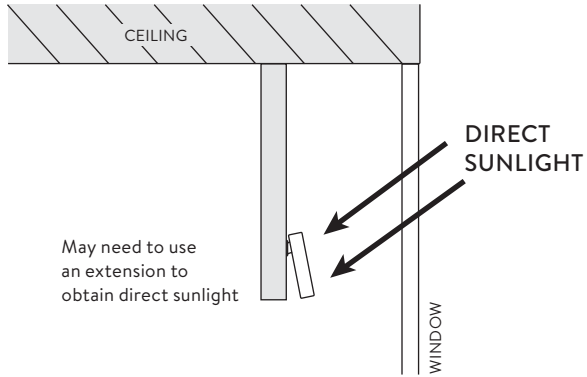

⚠ **The Daylight must be within range of a Lightcloud device or Gateway. See "*Finding a Location*"**

⚠ **The Daylight will not act as a "repeater" to extend the range of your Lightcloud network. If you need to extend your network range, use a Lightcloud Controller or other AC-powered device.**

Setup & Installation (cont'd)

4 Install

4a Screw the straight or angled mounting bracket to the mounting surface.

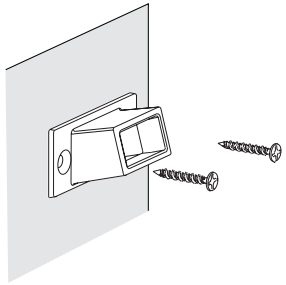

4b Snap the Daylight onto the mounting bracket.

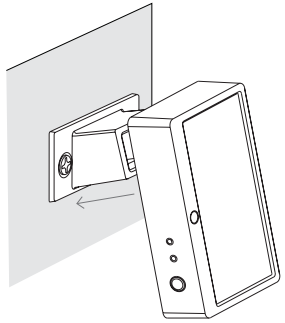

5 Configure

Login at lightcloud.com and click on Devices to associate a zone at your site. The application will show the last measured light level so you can configure actions to take at different levels. Or, simply call or email us:

1 (844) LIGHTCLOUD

1 (844) 544-4825

support@lightcloud.com

Functionality

Overview

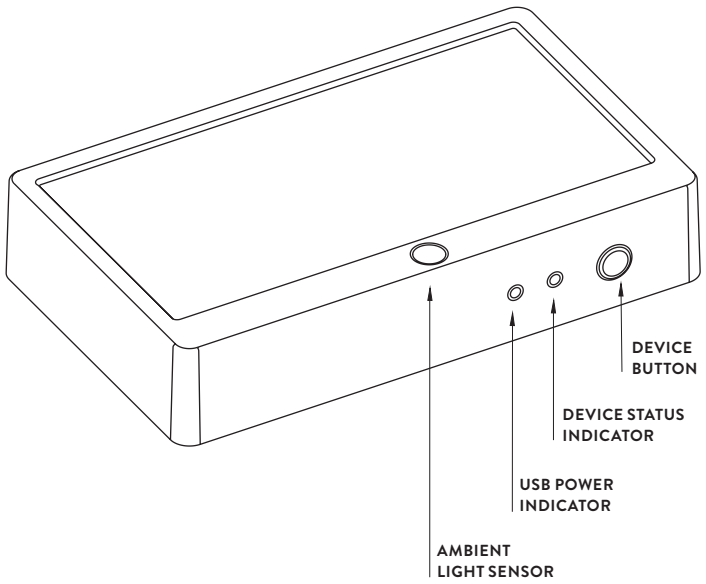

DEVICE STATUS INDICATOR:

- **Unlit:** When not powered by USB, indicates that the device is joined to a Lightcloud network and is operating normally
- **Solid green:** When powered by USB, indicates that the device is joined to a Lightcloud network
- **Green blink:** After pressing the Device Button, indicates that a light level measurement has been transmitted
- **Single red blink every 10 seconds:** Not joined to a Lightcloud network
- **Green/Red alternating:** Resetting to factory defaults

USB POWER INDICATOR:

- **White:** Powered by USB

DEVICE BUTTON:

- **Press:** Indicate in Lightcloud application and measure light level
- **Hold for 10 seconds while USB powered:** Force device to leave current Lightcloud network
- **Hold for 10 seconds while connecting USB power:** Reset to factory defaults and leave current network

DAYLIGHT HARVESTING:

Daylight Harvesting is the use of daylight to offset the use of electric lighting to light a space. If there's enough daylight in a space, the Lightcloud Daylight can make sure the lights are turned down or off, and turn them back on when the sun goes down.

The Lightcloud Daylight automatically takes light level measurements every 10 minutes. Pressing the Device Button will make an immediate measurement. Call or email RAB, or log in to lightcloud.com to configure actions to take at different light levels, such as turning off a zone when the light level exceeds 50 foot-candles.

Welcome



Lightcloud™

Controller

LCCONTROL20/D10

WE'RE HERE TO HELP:

1 (844) LIGHTCLOUD

1 (844) 544-4825

support@lightcloud.com

Hello

Lightcloud is a wireless lighting control service. The Lightcloud Controller is a remotely controlled switch and 0-10V dimming device.

Product Features

Wireless Control & Configuration

Switching up to 20A

0-10V Dimming

Power Monitoring

Patent Pending

Contents

Lightcloud Controller

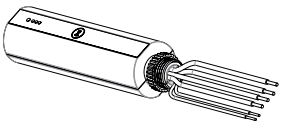

NPT Nut



O-ring



Instruction Manual

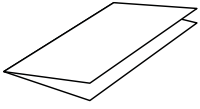

Wire Nuts


x 4


x 2

Specifications

PART NUMBER
LCCONTROL20/D10

INPUT
120-277VAC, 50/60Hz
<2W (Standby - 4W (Active)

MAXIMUM SWITCHED LOAD RATINGS
For Control of Magnetic, Electronic Ballast or LED
277VAC: 20A Magnetic/Resistive
240VAC: 5A Tungsten/Electronic, 20A FLA/ 60 LRA, 2HP
120VAC: 15A Tungsten, 1HP

OPERATING TEMPERATURE
-40°C to +40°C

OVERALL DIMENSIONS
1.55" diameter, 5.75" length
1/2" NPT Mount, Male
16AWG pigtails

WIRELESS RANGE
Line-of-Sight: 1000 feet
Obstructions: 100 feet

Warranty is active as long as service plan is active
Class 2
IP66 Rated
Indoor and Outdoor Rated
Wet and Damp Location
Plenum Rated

What You Need

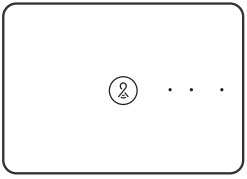

Lightcloud Gateway
A Lightcloud installation requires at least one Lightcloud Gateway to manage your devices.

WE'RE HERE TO HELP:

1 (844) LIGHTCLOUD

or 1 (844) 544-4825

support@lightcloud.com

Wiring

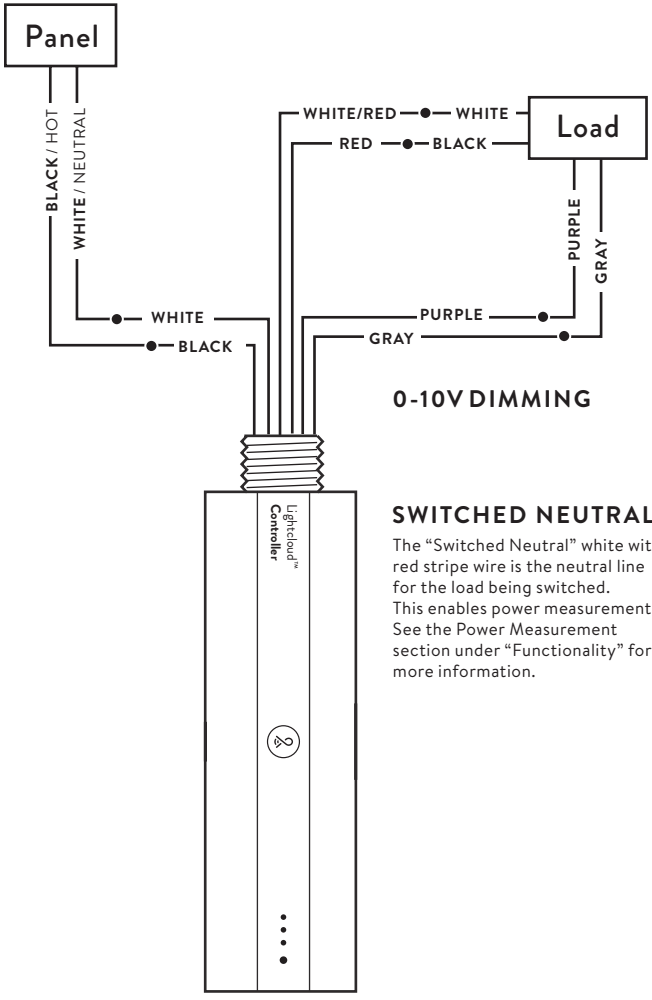

SWITCHED NEUTRAL

The "Switched Neutral" white with red stripe wire is the neutral line for the load being switched. This enables power measurement. See the Power Measurement section under "Functionality" for more information.

Setup & Installation

1 Turn off power

⚠ WARNING

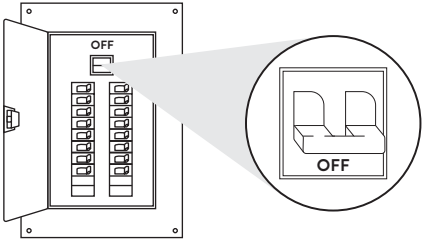

1a Find a Suitable Location

Use these guidelines when installing devices:

- If there is a clear line of sight between two Lightcloud devices, they can be placed up to 1000 feet apart.
- If the two devices are separated by ordinary drywall construction, try to keep them within 100 ft. of each other.
- Brick, concrete and steel construction may require additional Lightcloud devices to go around the obstruction.

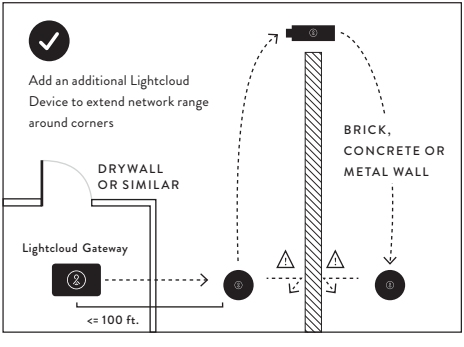

Setup & Installation (cont'd)

(2) Install your Lightcloud Controller

2a Install at a Junction Box (Indoor/Outdoor)

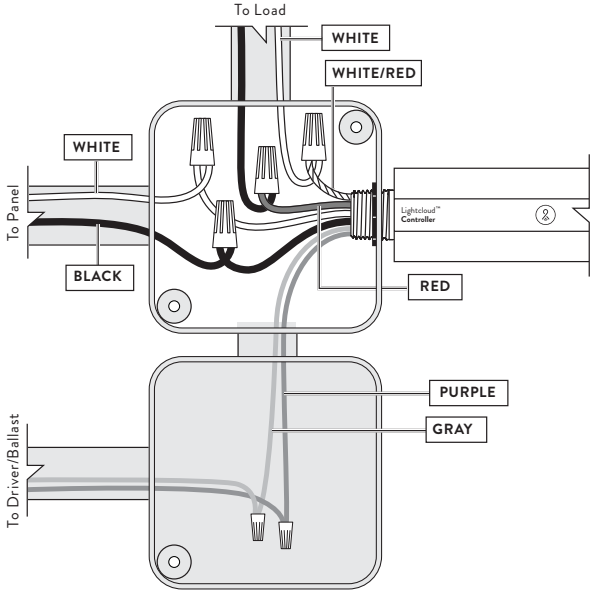

0-10V DIMMING

0-10V is a common method of low-voltage control of dimmable drivers and ballasts. **Purple:** 0-10V positive | **Gray:** 0-10V common

NOTE: The National Electrical Code requires that low-voltage wiring used in the same enclosure as high-voltage wiring have an equal or better insulation rating. You may need to complete your low-voltage wiring in another enclosure or use a partition.

2b At Lighting Panel or Trough

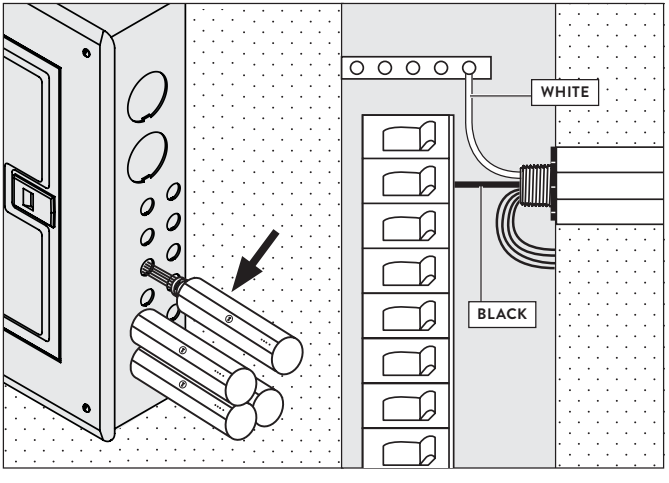

Space and code allowing, you may install Lightcloud devices directly in your breaker box or lighting panel. Alternatively, break out lighting circuits and install Lightcloud devices in a separate trough.

Setup & Installation (cont'd)

3 Labeling your device

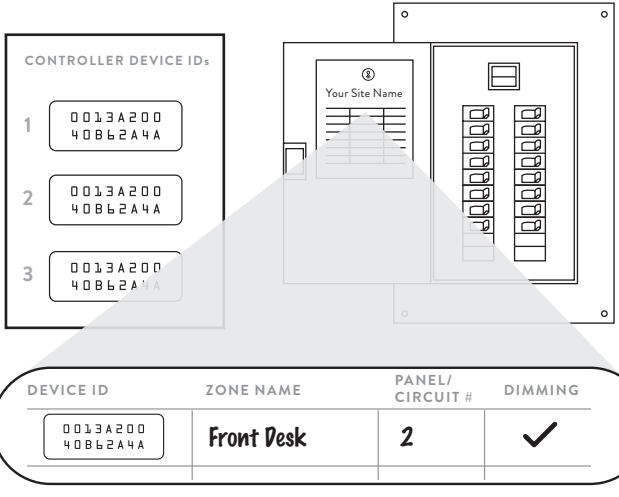

For setup and maintenance, we provide two Lightcloud Device Tables with the Gateway: one that you can attach to your panel and one to hand off to a building manager. Attach the Device Identification stickers included with each device to a row, then write in additional information, such as Zone name, Panel/Circuit Number, and whether or not a zone uses dimming.

4 Power up

To add new devices to your Lightcloud network, call RAB at 1 (844) LIGHTCLOUD, or email us at support@lightcloud.com.

5 Confirm Device Connectivity

Confirm Status Indicator is Solid Green (see details below)

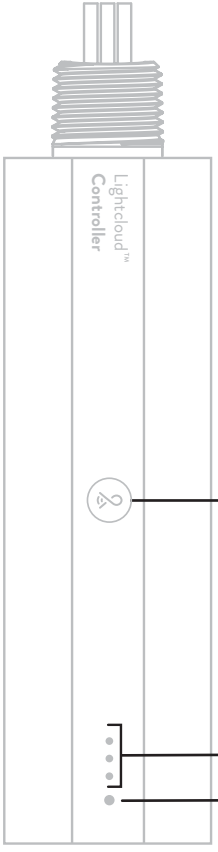

DEVICE IDENTIFICATION BUTTON

- Illuminated when device is powered
- Press once to highlight this device in the Lightcloud Application
- Press twice to toggle circuit on and off
- Press twice and hold to set dim level
- Press and hold for 10 seconds to remove this device from a Lightcloud network
- Blinks when device is indicated from the Lightcloud Application

SIGNAL INDICATOR

Illuminates when the device receives a message and indicates the strength of the signal.

3 - Best signal
2 - Acceptable signal
1 - Unacceptable signal

Consult the "Finding a Location" section for more information

STATUS INDICATOR

Solid GREEN when connected to your Lightcloud network. Blinking RED when not connected. The device will automatically continue trying to connect to a network in Setup Mode.

6 Commission your devices

Log on to **www.lightcloud.com** or call **1 (844) LIGHTCLOUD**

Functionality

Configuration

All configuration of Lightcloud products may be performed using the Lightcloud web or mobile application, or by calling RAB.

WE'RE HERE TO HELP:

1 (844) LIGHTCLOUD

or 1 (844) 544-4825

support@lightcloud.com

Operating Modes

CONTROLLER Provides switching and dimming for a single zone

TRIGGER Detect when an attached circuit is open or closed. For example, you could attach the Controller in Trigger mode to an existing occupancy sensor to allow your Lightcloud system to react to the sensor.

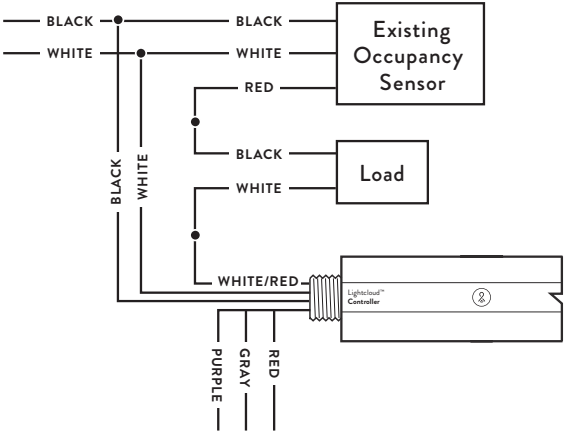

REPEATER: Disables zone control and power measurement, and extends the range of your network.

POWER MEASUREMENT: The Lightcloud Controller is capable of measuring the power usage of the attached circuit. In order to utilize this function, the neutral wire of the load must be connected to the white-red sense wire. If the Switched Neutral line cannot be used, it should be tied to the regular neutral wires (i.e. all neutral wires joined).

POWER LOSS DETECTION: If mains power to the Controller is lost, the device will detect this and alert the Lightcloud application.

EMERGENCY DEFAULT: If communication is lost, the Controller may optionally fall back to a specific state, such as turning the attached circuit on.



Any wires not in use must be capped off or otherwise insulated.

FCC Information:
This device complies with Part 15 of the FCC Rules. Operation is subject to the following two conditions:
1. This device may not cause harmful interference, and
2. This device must accept any interference received, including interference that may cause undesired operation.

Note: This device has been tested and found to comply with the limits for Class B digital devices pursuant to Part 15 Subpart B, of the FCC rules. These limits are designed to provide reasonable protection against harmful interference in a residential environment. This equipment generates, uses, and can radiate radio frequency energy, and if not installed and used in accordance with the instruction manual, may cause harmful interference to radio communications. However, there is no guarantee that interference will not occur in a particular installation. If this equipment does cause harmful interference to radio or television reception, which can be determined by turning the equipment off and on, the user is encouraged to try and correct the interference by one or more of the following measures:
• Reorient or relocate the receiving antenna.
• Increase the separation between the equipment and receiver.
• Connect the equipment into an outlet on a circuit different from that to which the receiver is connected.
• Consult the dealer or an experienced radio/TV technician for help.

To comply with the FCC's RF exposure limits for general population / uncontrolled exposure, this transmitter must be installed to provide a separation distance of at least 20 cm from all persons and must not be co-located or operating in conjunction with any other antenna or transmitter.

CAUTION: Changes or modifications to this equipment not expressly approved by RAB Lighting may void the user's authority to operate this equipment.

Lightcloud is a commercial wireless lighting control system & service. It's powerful and flexible, yet easy to use and install. Learn more at **lightcloud.com**

1 (844) LIGHTCLOUD
1 (844) 544-4825
support@lightcloud.com

RAB®

Custom manufactured in China

© RAB Lighting, Inc

170 Ludlow Avenue Northvale, NJ 07647