Catalog Number: MC3042S1400SD

Features and Ratings

- Outdoor Enclosure (NEMA Type 3R)
- Ring Type Meter Cover, No Bypass
- Meter Socket Rating: 320A Continuous, 400A Max.
- Panelboard Rating: 400A Max, 1 Phase, 3 Wire, 120/240V~
- (30) 1" Breaker Spaces, (42) Circuits Max.
- 22,000 AIC Max. Rated (See Wiring Diagram for Details)
- Underground Service Only
- Surface Mounting
- Uses HD Type Hubs
- For Photovoltaic or Alternate Energy applications (200A Max.)
- Complies with EUSERC Dwg. No. 302A

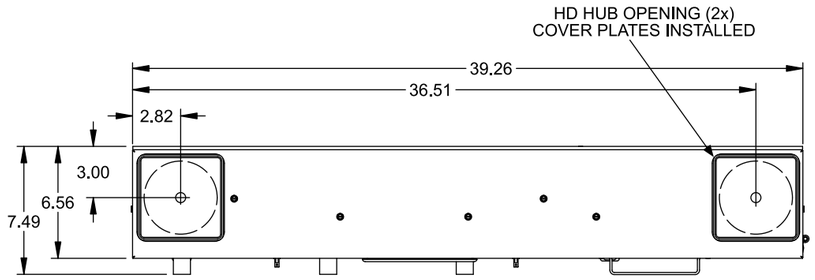

View Shown Without Doors

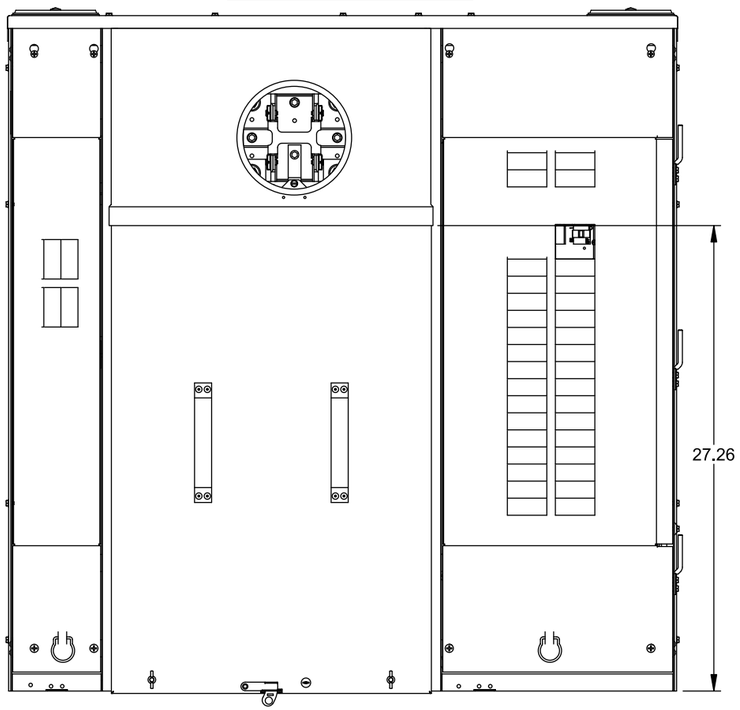

View Shown Without Covers, Doors, Deadfronts

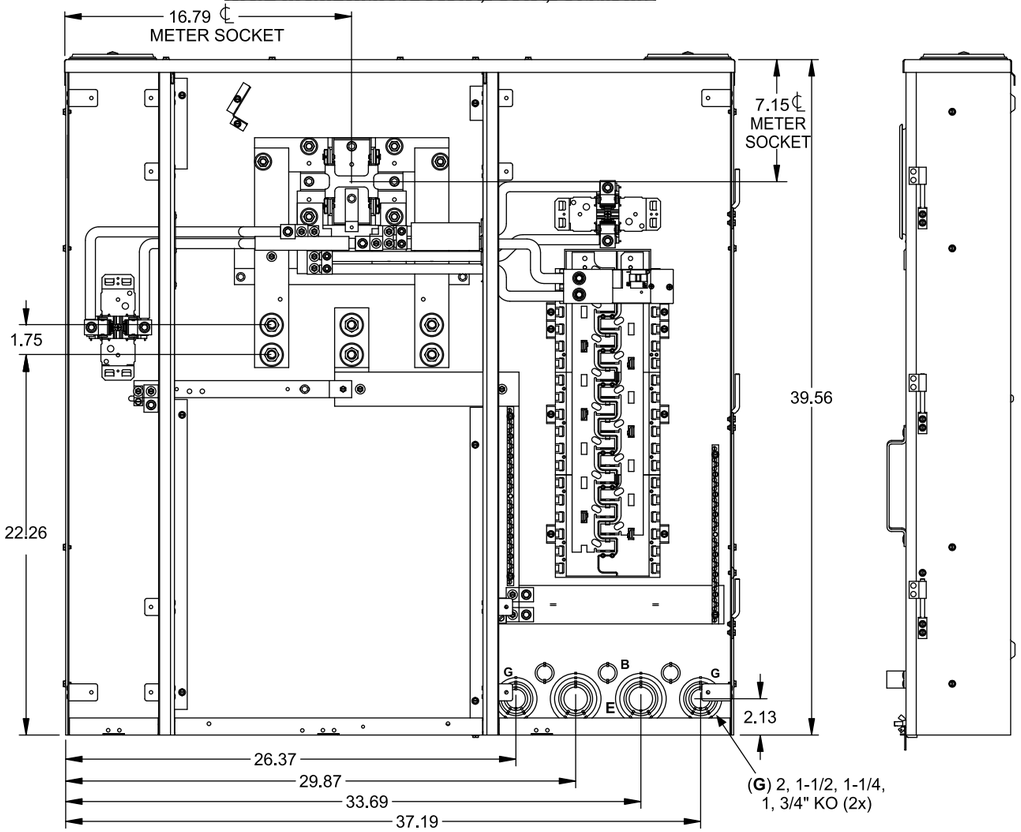

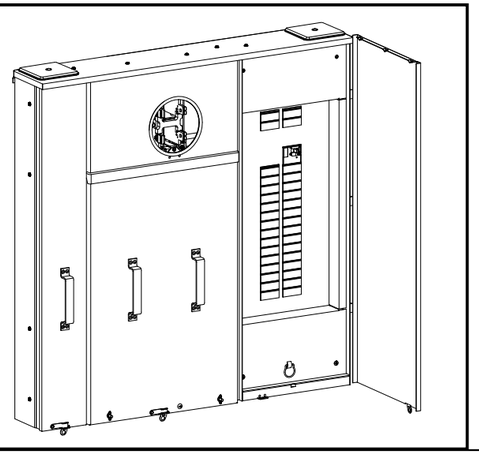

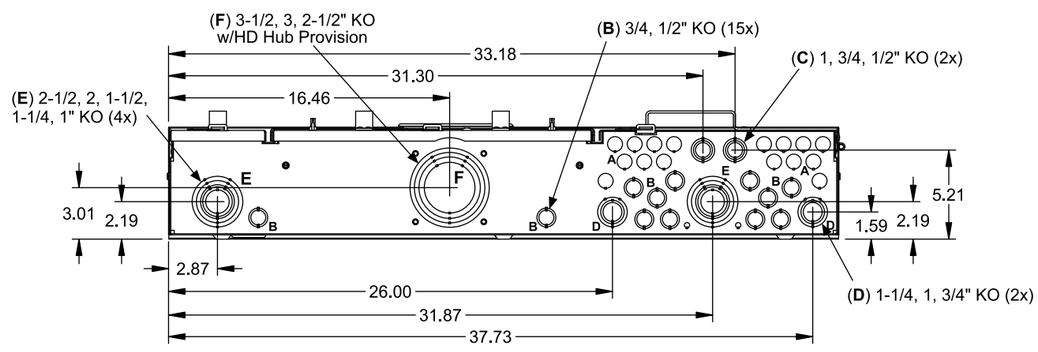

Accessories

If hub is required, use Type HD catalog numbers listed below:

Trade size (in)	Catalog No.
2"	EC56854
2 ½"	EC56855
3"	EC56856
3 ½"	EC56857
4"	EC56858
Closure Plate	EC56933S

Accessory	Catalog No.
Filler Plate	QF3 or ECQF3
200 Amp Main Breaker	QN2200RH
150 Amp Main Breaker	QN2150RH
LUG #6-350 kcmil	SUK350TA
LUG #2-600 kcmil	SUK600TA
IUG 500-1000 kcmil	SUK1000TA
Flush Rail Kit	ECFRK3
Standby Interlock Kit	ECSBPK05
Standby Interlock Kit	ECSBPK07
LUG KIT #2-2/0	ECLK2125
LUG KIT #8-2/0	ECLK2150
LUG KIT #2-300kcmil (200A MAX)	ECLK2225

Torques & Wire Sizes

Load, Neutral and Ground Terminals

Terminal	Wire Size	Torque
A, B, N SUK350TA SUK600TA SUK1000TA	 (2)#6-350 kcmil #2-600 kcmil 500-1000 kcmil	 275 lb-in 375 lb-in 500 lb-in
N1, N2	300 kcmil - #4	250 lb-in
G1	2/0 - #14	50 lb-in
G2	#2 - #14	50 lb-in
Branch Breaker Terminals	See Markings on Breaker	
NEUTRAL/EQUIP GROUND BAR		
Small Terminals	10 - 14 AWG 8 AWG 6 AWG	20 lb-in 25 lb-in 35 lb-in
Large Terminals	10 - 14 AWG 8 AWG 1/0 - 6 AWG	35 lb-in 40 lb-in 45 lb-in

Tightening Torques:

5/16" Nuts(1/2" Drive).....130-140 in-lbs
3/8" Nuts(9/16" Drive).....240-260 in-lbs
1/2" Nuts(3/4"Drive) .....490-540 in-lbs

Terminal	Wire Size	Torque
NEUTRAL/EQUIP GND*		
Small Terminals	(2) #12-14 CU (2) #12 AL	20 lb-in 20 lb-in
Large Terminals	(2 or 3) #12-14 CU (2 or 3) #10-12 AL (2) #10 CU (3) #10 CU	35 lb-in 35 lb-in 35 lb-in 50 lb-in
EQUIPMENT GROUND BAR		
ECGB Series	(1, 2 or 3) #14 CU (1 or 2) #10-12 AL/CU #8 AL/CU #6 - 4 AL/CU	20 lb-in 20 lb-in 25 lb-in 35 lb-in

*Only Equipment Ground Terminals may use more than one wire per terminal.

Schematic

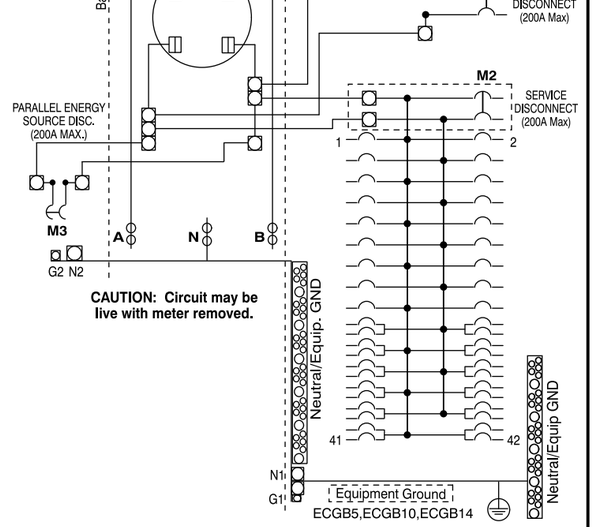

© 2015 Copyright Siemens Industry, Inc.

SIEMENS
Siemens Industry, Inc.

SolarReady™ Meter Combination

Description:
400A, UG, Surf Mount, No Bypass

KAM 1/18/18	Fam .	DO NOT SCALE DRAWING	Dwg. No. **MC3042S1400SD**