Product data sheet

Specifications



Circuit breaker, PowerPacT B, 70A, 3 pole, 600Y/347VAC, 25kA, terminal nut, thermal magnetic, 80%

BJF36070

Product availability: Stock - Normally stocked in distribution facility

Main

Range	PowerPact
Product name	PowerPact B
Device short name	BJ 070
Product or Component Type	Circuit breaker
Device Application	Distribution

Complementary

Line Rated Current	70 A
Number of Poles	3P
Protected poles description	3t
Control Type	Toggle
Breaking capacity code	J
Breaking capacity	100 kA 208Y/120 V AC 50/60 Hz UL 489 100 kA 240 V AC 50/60 Hz UL 489 65 kA 480/277 V AC 50/60 Hz UL 489 65 kA 480 V AC 50/60 Hz UL 489 25 kA 600Y/347 V AC 50/60 Hz UL 489 50 kA 250 V DC UL 489
[Ue] rated operational voltage	690 V AC 50/60 Hz UL 489
Network Frequency	50/60 Hz
[Ics] rated service breaking capacity	100 kA 220...240 V AC 50/60 Hz IEC 60947-2 25 kA 500...525 V AC 50/60 Hz IEC 60947-2 2.5 kA 690 V AC 50/60 Hz IEC 60947-2 65 kA 380...415 V AC 50/60 Hz IEC 60947-2 65 kA 440 V AC 50/60 Hz IEC 60947-2
[Uimp] rated impulse withstand voltage	8 kV IEC 60947-2
Trip unit technology	Thermal-magneticTM-D,
Continuous current rating	80 %
[Ui] rated insulation voltage	800 V IEC 60947-2
Trip unit name	TM-D
Suitability for isolation	Yes IEC 60947-2
Utilisation category	Category A
Mechanical durability	15000 cycles IEC 947-1 Annex K ed 5.2
Electrical durability	10000 cycles IEC 947-1 Annex K ed 5.2 440 V In
Connection pitch	1.06 in (27 mm)

Price is “List Price” and may be subject to a trade discount – check with your local distributor or retailer for actual price.

Disclaimer: This documentation is not intended as a substitute for and is not to be used for determining suitability or reliability of these products for specific user applications

AWG gauge	AWG 14...AWG 8 aluminium/copper AWG 6...AWG 3/0 aluminium/copper
Local signalling	Presence of auxiliary contacts flag green)
Mounting mode	Clip-on 35 mm symmetrical DIN rail) By screws plate)
Electrical connection	Terminal nut, ON and OFF end
Tightening torque	44.3 lbf.in (5 N.m) 0.004…0.02 in² (2.5…16 mm²) (AWG 14...AWG 4) 79.7 lbf.in (9 N.m) 0.04…0.1 in² (25…95 mm²) (AWG 3...AWG 3/0)
Number of slots	1 auxiliary switch OF plug-in) 1 voltage release MN or MX plug-in) 1 alarm switch SD plug-in)
Power wire stripping length	0.8 in (20 mm)
Color	Gray RAL 7016)
9 mm pitches	9
Height	5.4 in (137 mm)
Width	3.2 in (81 mm)
Depth	3.1 in (80 mm)
Product Weight	2.037 lb(US) (0.924 kg)
Quantity per Set	Set of 1
Circuit breaker application	HACR rated

Environment

Quality labels	CE
Standards	UL 489 GB 14048.2 EN/IEC 60947-5-1 NMX J-266 EN/IEC 60947-2 CSA C22.2 No 5 NEMA AB1
Product certifications	UL IEC CCC EAC CSA NOM
IP degree of protection	Front cover IP40 IEC 60529
IK degree of protection	IK07 conforming to IEC 62262
Pollution degree	3 IEC 60947-1
Ambient Air Temperature for Operation	-13…158 °F (-25…70 °C)
Ambient Air Temperature for Storage	-58…185 °F (-50…85 °C)
Operating altitude	6561.68 ft (2000 m) without derating 5000 m with derating

Ordering and shipping details

Category	US10DE201132
Discount Schedule	0DE2
GTIN	3606481149893
Returnability	Yes

Country of origin	MX

Packing Units

Unit Type of Package 1	PCE
Nbr. of units in pkg.	1
Package 1 Height	3.300 in (8.382 cm)
Package 1 Width	4.700 in (11.938 cm)
Package 1 Length	8.100 in (20.574 cm)
Package weight(Lbs)	2.599 lb(US) (1.179 kg)

Contractual warranty

Warranty (in months)	18

Environmental Data

Schneider Electric aims to achieve Net Zero status by 2050 through supply chain partnerships, lower impact materials, and circularity via our ongoing “Use Better, Use Longer, Use Again” campaign to extend product lifetimes and recyclability.

Environmental Data explained >

How we assess product sustainability >

Environmental footprint

Total lifecycle Carbon footprint	**226 kg CO2 eq.**
Carbon footprint of the manufacturing phase [A1 to A3]	**6 kg CO2 eq.**
Carbon footprint of the distribution phase [A4]	**0 kg CO2 eq.**
Carbon footprint of the installation phase [A5]	**0.3 kg CO2 eq.**
Carbon footprint of the use phase [B2, B3, B4, B6]	**217 kg CO2 eq.**
Carbon footprint of the end-of-life phase [C1 to C4]	**2 kg CO2 eq.**
Environmental Disclosure	**Product Environmental Profile**

Use Better

Materials and Substances

Packaging made with recycled cardboard	**Yes**
Packaging without single use plastic	**Yes**
SCIP Number	**42816a74-6c29-4456-9183-8c3fa59a5a4c**
EU RoHS Directive	**Compliant By Exemption**
REACh Regulation	**Reference contains Substances of Very High Concern above the threshold**
California proposition 65	**WARNING: This product can expose you to chemicals including: DINP, which is known to the State of California to cause cancer, and DIDP, which is known to the State of California to cause birth defects or other reproductive harm. For more information go to www.P65Warnings.ca.gov**
Halogen content performance	**Halogen free product**
PVC free	**Yes**

Use Longer

Lifetime extension

Repair	**No**

Use Again

Repack and remanufacture

Recyclability potential, in %	**55**
Take-back	**No**
WEEE Label	**The product must be disposed on European Union markets following specific waste collection and never end up in rubbish bins.**

Technical Illustration

Dimensions

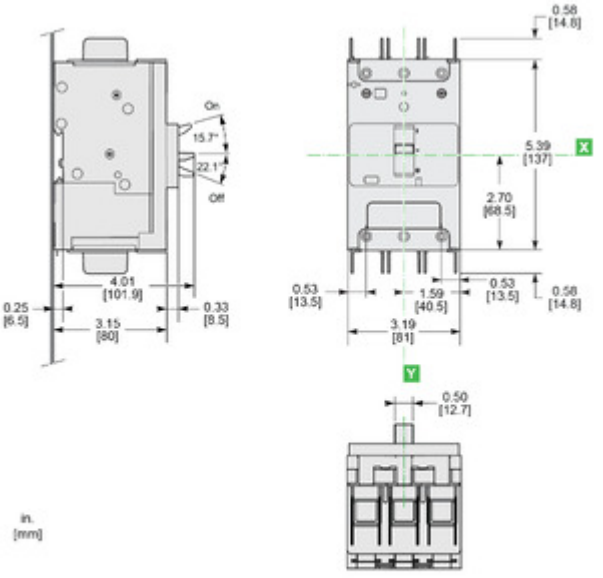

(F) TERMINATION OPTION - Terminal Nut (ON end) / Terminal Nut (OFF end)
ALL DIMENSIONS ARE APPROXIMATE.
ALSO REFER TO CAD, TECHNICAL DRAWINGS, AND DOCUMENTATION