Panel Thickness E dim. inches (mm)	Number of Gasket
1/16 (1.6)	4
1/8 (3.2)	3
3/16 (4.8)	2
1/4 (6.4)	1

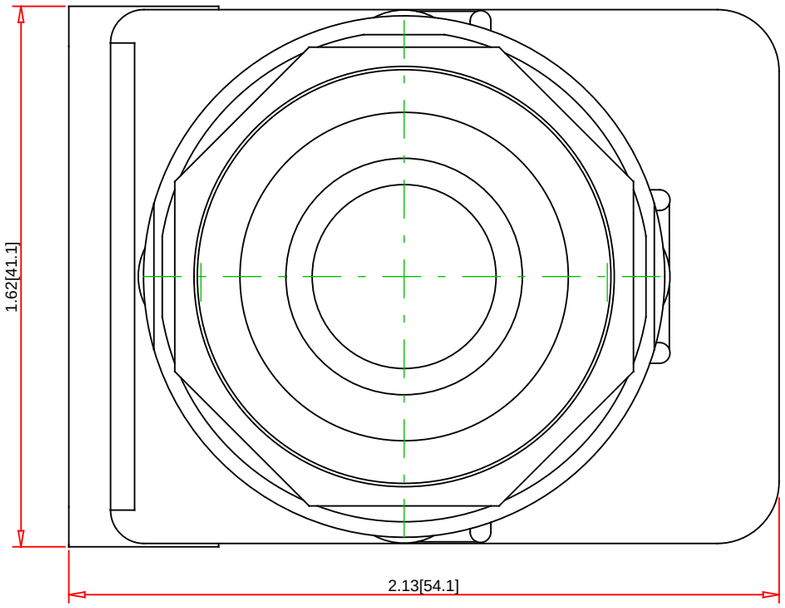

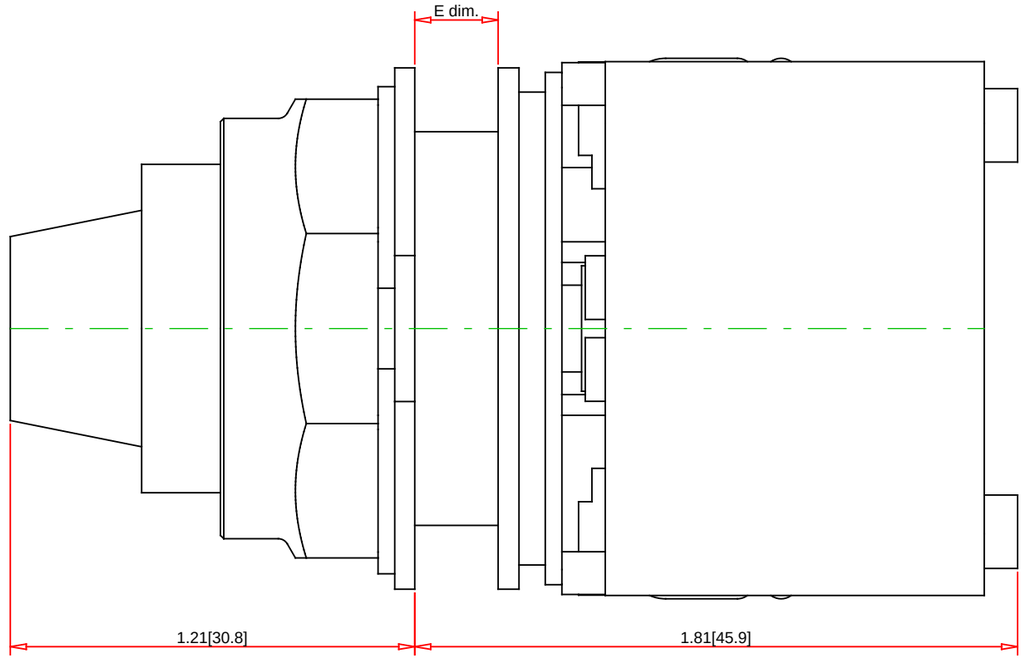

Note:
- Drawings Not To Scale
- Drawings Subject to Change Without Notice
- Dimensions are inches next to [Millimeters]

Part No.:

9001KP1L31

Schneider Electric United States
North American Division
Boston One Campus
800 Federal Street
Andover, MA 01810, USA
Phone:+1 8773425173
Email: CCC@us.schneider-electric.com

Technical Information:

UL File:	E78403 CCN NKCR
CSA File:	LR24590 Class 3211-03
CE Marked:	Yes
RoHS:	Yes
NEMA / IP Rating:	NEMA 1/2/3/3R/4/6/12/13 Water tight, Dust tight and Oil tight (Indoor/Outdoor), IP66
Key Number:	n/a
Key Removal:	n/a
Light Module Supply Voltage:	110/120VACat50/60Hz
Light Module Type:	Transformer
Number of Operators:	n/a

Specification:

Description:	30mm Pilot Light
Ring Nut Material:	Chromium Plated Zinc
Operator Type:	Standard
Operator Action:	n/a
Button Type:	n/a
Guard Type:	n/a
Button/Cap Color:	n/a
Lens Type:	Plastic (Fresnel)
Lens Color:	Blue
Knob Type:	not applicable
Knob Color:	n/a
Number of Positions:	n/a