Product data sheet

Specifications



Mini circuit breaker, QO, 35A, 1 pole, 120/240VAC, 10kA, bolt on

QOB135

Product availability: Stock - Normally stocked in distribution facility

Main

Product	Miniature circuit-breaker
Range	QO
Current Rating	35 A
Voltage Rating	120/240 V AC 120 V AC
Mounting Type	Bolt-on
Number of Poles	1P
Circuit Breaker Type	Standard
Ratings	HACR rated
Electrical Connection	Pressure plate

Complementary

Interrupt Rating	10 kA 120/240 V AC 10 kA 120 V AC
Number of Panel Spaces	1
Wire Size	AWG 8...AWG 2 copper or aluminium
Tightening Torque	44.3 lbf.in (5 N.m)
Height	3.1 in (79 mm)
Width	0.7 in (19 mm)
Depth	2.9 in (74 mm)
Product Weight	0.300 lb(US) (0.136 kg)

Environment

Certifications	UL Listed CSA
Ambient Rating	104 °F (40 °C)

Ordering and shipping details

Category	US10DE200015
Discount Schedule	0DE2
GTIN	785901509905
Returnability	Yes
Country of origin	MX

Price is “List Price” and may be subject to a trade discount – check with your local distributor or retailer for actual price.

Disclaimer: This documentation is not intended as a substitute for and is not to be used for determining suitability or reliability of these products for specific user applications

Packing Units

Unit Type of Package 1	PCE
Nbr. of units in pkg.	1
Package 1 Height	0.800 in (2.032 cm)
Package 1 Width	3.500 in (8.890 cm)
Package 1 Length	3.500 in (8.890 cm)
Package weight(Lbs)	4.800 oz (136.078 g)
Unit Type of Package 2	PAL
Number of Units in Package 2	3000
Package 2 Height	40.000 in (101.600 cm)
Package 2 Width	40.000 in (101.600 cm)
Package 2 Length	48.000 in (121.920 cm)
Package 2 Weight	900.0004 lb(US) (408.233 kg)

Contractual warranty

Warranty (in months)	18

Environmental Data

Schneider Electric aims to achieve Net Zero status by 2050 through supply chain partnerships, lower impact materials, and circularity via our ongoing “Use Better, Use Longer, Use Again” campaign to extend product lifetimes and recyclability.

Environmental Data explained >

How we assess product sustainability >

Environmental footprint

Total lifecycle Carbon footprint	**18 kg CO2 eq.**
Carbon footprint of the manufacturing phase [A1 to A3]	**0.8 kg CO2 eq.**
Carbon footprint of the distribution phase [A4]	**0 kg CO2 eq.**
Carbon footprint of the installation phase [A5]	**0 kg CO2 eq.**
Carbon footprint of the use phase [B2, B3, B4, B6]	**17 kg CO2 eq.**
Carbon footprint of the end-of-life phase [C1 to C4]	**0 kg CO2 eq.**
Environmental Disclosure	Product Environmental Profile

Use Better

Materials and Substances

Packaging made with recycled cardboard	**No**
Packaging without single use plastic	**Yes**
SCIP Number	**Af42fb01-813d-40c0-ae28-b8b3299dbc99**
EU RoHS Directive	Compliant
REACh Regulation	Reference contains Substances of Very High Concern above the threshold
California proposition 65	**WARNING: This product can expose you to chemicals including: Nickel (Metallic), which is known to the State of California to cause cancer. For more information go to www.P65Warnings.ca.gov**
Halogen content performance	**Halogen free product**

Use Longer

Lifetime extension

Repair	**No**

Use Again

Repack and remanufacture

Recyclability potential, in %	**0**
Circularity Profile	**No need of specific recycling operations**
Take-back	**No**

Technical Illustration

Dimensions

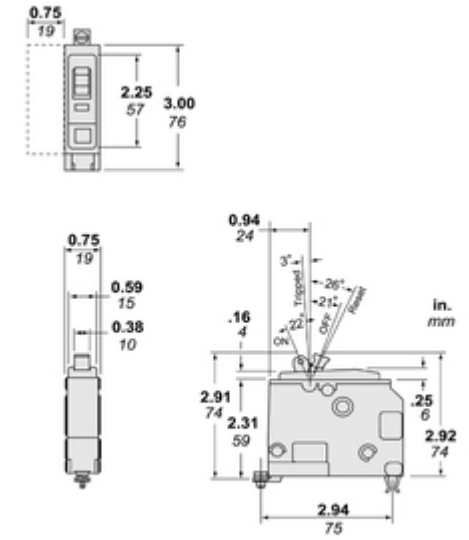

Dimensions are approximate. Refer to technical documentation for additional detail.

Image of product / Alternate images

Alternative






INTERRUPTING
RATING
10 000 A
50/60 Hz
A nom. I/ AIR
#8 AWG Al/Cu
(8 mm²) 60/75° C
#6 - #2 AWG Al/Cu
(13 - 35 mm²) 75° C only/solo/seul
45 lb-in /pu/g/po (5 N-m)
40 °C
138

