EBP1400NCX and EBP1400NCF Instruction Manual

⚠ WARNING

Risk of Fire/Electric Shock

If not qualified, consult an electrician.

⚠ WARNING

Risk of Electric Shock

Disconnect power at fuse or circuit breaker before installing or servicing.

UL LISTED

EBP1400NCX

EBP1400NCF

For use in temperature rating 20°C to 55°C

CONTAINS NICKEL-CADMIUM RECHARGEABLE BATTERY. MUST BE RECYCLED OR DISPOSED OF PROPERLY.

Ni - Cd

Important Safeguards

WHEN USING ELECTRICAL EQUIPMENT, BASIC SAFETY PRECAUTIONS SHOULD ALWAYS BE OBSERVED INCLUDING THE FOLLOWING.

1. READ AND FOLLOW ALL SAFETY INSTRUCTIONS
2. Do not use outdoors.
3. Do not mount near gas or electric heaters.
4. Equipment should be mounted in locations and at heights where it will not readily be subject to tampering by unauthorized personnel.
5. The use of accessory equipment not recommended by Sure-Lites may cause an unsafe condition.
6. Do not use this equipment for other than its intended purpose.
7. SAVE THESE INSTRUCTIONS

NOTES:

Note 1. To prevent high voltage from being present on the output terminals (red/white, red, and yellow), do not connect the test button indicator light to the EBP until Step 7 of the installation instructions.

Note 2. This product is for use with most 2' through 8' (6W-215W single and bi-pin fluorescent lamps including energy saving, circline, U-shaped and biax. For specific lamp compatibility, please see the table later in the instructions.

Note 3. Make sure all of the connections are in accordance with the National Electrical Code and any local regulations.

Note 4. To reduce the risk of electrical shock, disconnect both normal and emergency power supplies and the test button indicator light (which disconnects the battery) before servicing.

Note 5. This emergency ballast is for factory or field installation in the ballast channel.

Note 6. This product is for use in indoor fixtures. This product is not intended for use near air handling heated air outlets or in wet or hazardous locations.

Note 7. An unswitched AC power source is required (120, 240, or 277 volts).

Note 8. Do not attempt to service the battery. A sealed, no-maintenance battery is used that is not field replaceable. Contact the manufacturer for information on service.

Note 9. Servicing should be performed by qualified service personnel.

EATON

Powering Business Worldwide

INSTALLATION

WARNING: to prevent high voltage on Red / White, Red, and Yellow output terminals prior to installation, the Test Button / Indicator Light must be disconnected. Connect the Test Button / Indicator Light after installation.

NOTE: Make sure that the necessary branch circuit wiring is available. An unswitched source of power is required.

1. Disconnect AC power from the fixture. Remove the ballast channel cover. Install the emergency ballast with grounding screws either in the ballast channel (see illustrations 1 & 2) or on top of the fixture (see illustration 3 / EBP1400NCX only).
2. Select the appropriate wiring diagram to connect the emergency ballast to the AC ballast and lamp. Make sure all connections are in accordance with the National Electrical Code and any local regulations. (See Illustrations 4 and 5 for terminals).
3. Refer to the lamp compatibility table for the HIGH (Red) or Low (Red / White) connection per the lamp(s) being illuminated by the emergency ballast.
4. Install the test button / indicator light through the ballast channel cover of a troffer (Illustration 1 & 6) or through the side of a strip fixture (Illustration 2 & 7). Drill or punch a 7/8" hole to install the test button / indicator light as shown in illustration 6. Drill or punch a 1/2" hole to install the test button / indicator light as shown in illustration 7. Install the test button / indicator light as shown in the selected illustration. Apply the two included labels ("Charging Indicator Light" and "Emergency Light Push to Test") adjacent to the test button indicator light.
5. In a readily visible location, attach the included label "CAUTION – This unit Has More Than One Power Connection Point. To Reduce The Risk Of Electric Shock, Disconnect Both The Branch Circuit-Breakers Or Fuses and the Test Button / Indicator Light Before Servicing".
6. In an area readily visible during relamping, attach the included relamping label. Write in the lamp type and wattage.
7. After installation is complete, connect the test button / indicator light. The factory installed version (EBP1400NCF) will have 2 twisted wires (brown and purple) at the access plate which must be connected for the fixture to operate in emergency mode.
8 Replace covers being careful not to pinch wires, install lamps, supply AC power to the emergency ballast.
9. A short term discharge test may be conducted after the emergency ballast has been charging for one hour. Charge for 24 hours before conducting a long – term discharge test. Refer to OPERATION.

Illustration 1

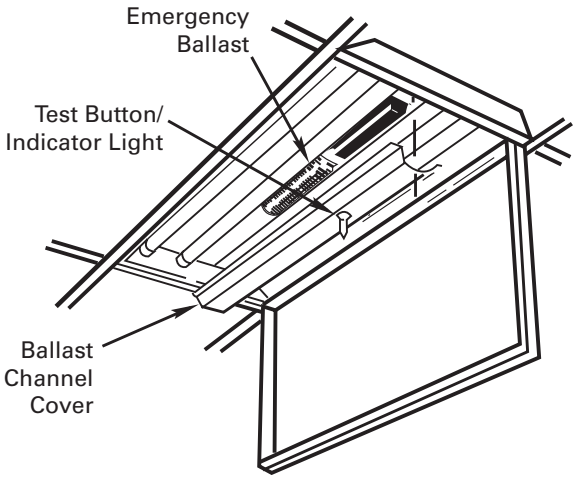

Illustration 2

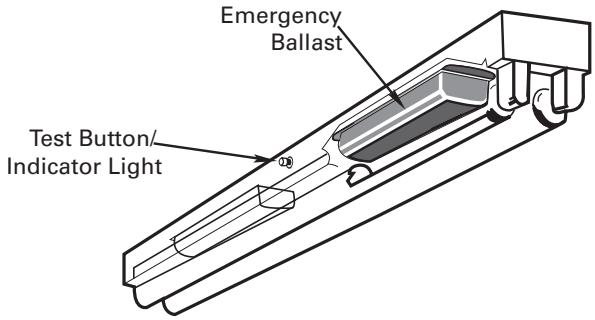

Illustration 3

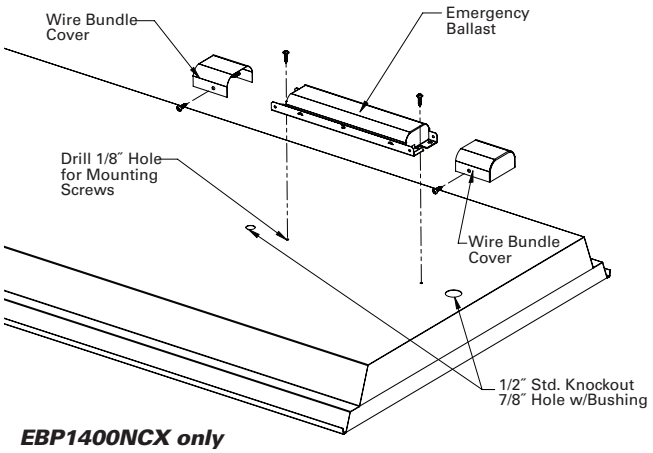

EBP1400NCX only

Illustration 4

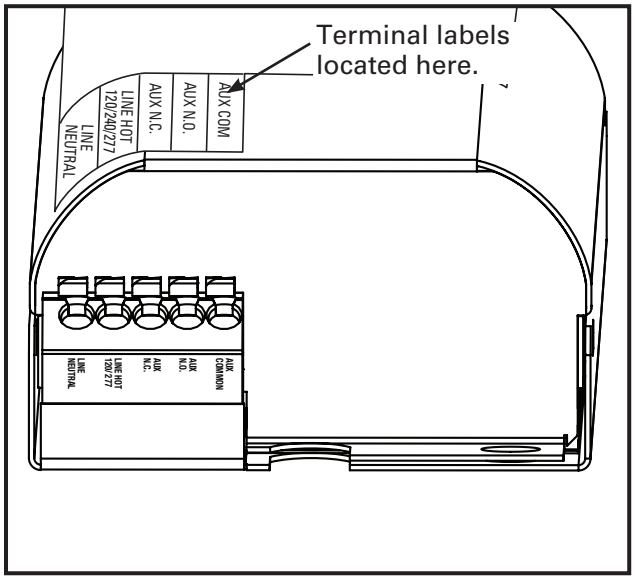

Illustration 5

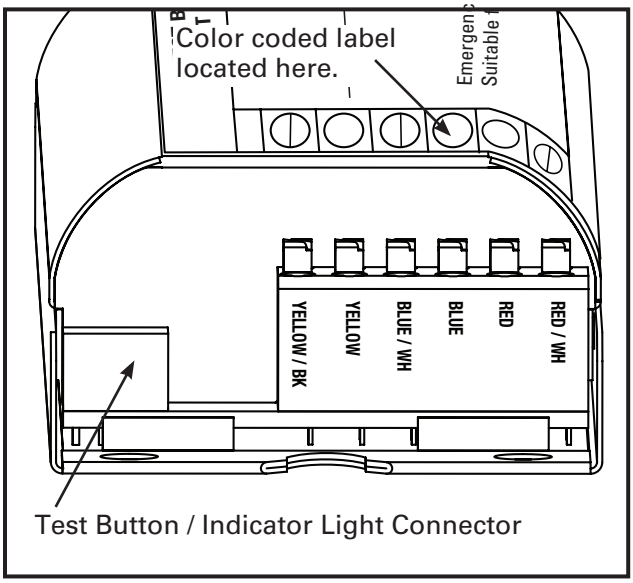

Illustration 6

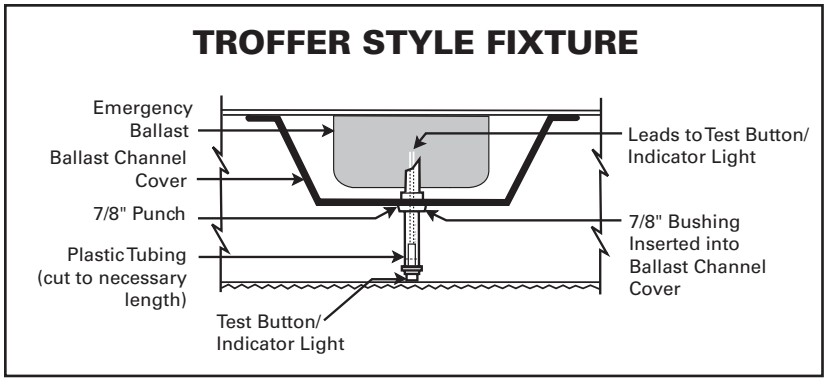

Illustration 7

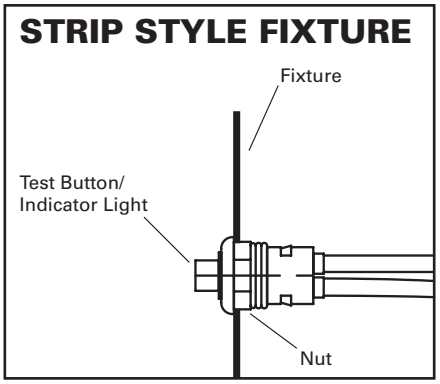

Lamp Compatibility Table

Lamp Type	Number of Lamps	Lamps Connected to Low/High (Red) Output	Wattage
T5	1	HIGH (RED)	6 - 25, 39
T5	1	"LOW (RED / WHITE)"	28 - 35
T5HO	1	HIGH (RED)	24
T5HO	1	"LOW (RED / WHITE)"	54 - 80
T5 CIR	1	HIGH (RED)	22 - 55
T8	1	HIGH (RED)	15 - 32
T8	1	"LOW (RED / WHITE)"	59 - 86
T8U	1	HIGH (RED)	32
T9 CIR	1	HIGH (RED)	20 - 32
T12	1	HIGH (RED)	20 - 75
T12	1	"LOW (RED / WHITE)"	75 - 95
T12HO	1	HIGH (RED)	35
T12HO	1	"LOW (RED / WHITE)"	95 - 110
T12VHO	1	"LOW (RED / WHITE)"	215
BIAX	1	HIGH (RED)	18 - 55

OPERATION

When AC power is applied, the charging indicator light is illuminated, indicating the battery is being charged. When power fails, the emergency ballast automatically switches to emergency power, operating one lamp at reduced illumination for at least 90 minutes.

MAINTENANCE

Although no routine maintenance is required to keep the emergency ballast functional, it should be checked periodically to comply with local codes. The following schedule is recommended:

1. Visually inspect the charging light monthly. It should be illuminated.

2. Test the emergency operation of the fixture at 30 day intervals for a minimum of 30 seconds. Depending on installation, one lamp should operate at reduced illumination.

3. Conduct a 90 – minute discharge test once a year. Depending on installation, one lamp should operate at reduced illumination for at least 90 minutes.

Refer any service requirements indicated by these checks to qualified personnel.

NOTE: After installing the test button / indicator light, mark it with the appropriate label.

WIRING DIAGRAMS FOR 1-LAMP EMERGENCY OPERATION

TYPICAL SCHEMATICS ONLY. MAY BE USED WITH OTHER BALLAST. CONSULT THE FACTORY FOR OTHER WIRING DIAGRAMS

1 LAMP INSTANT START

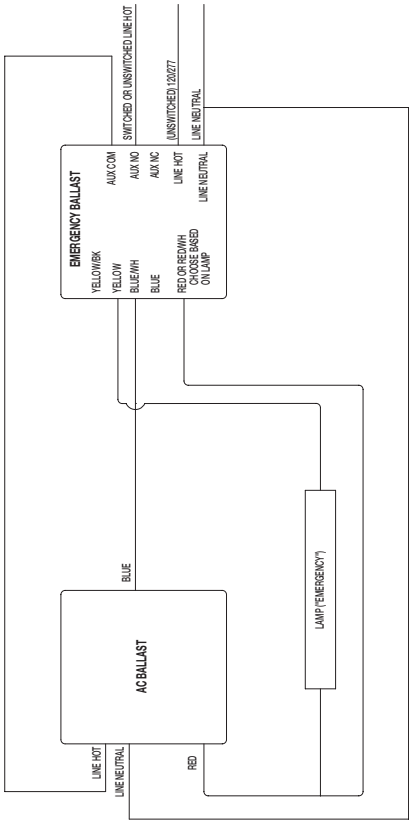

2 LAMP RAPID START SERIES LAMP SERIES YELLOW FILAMENT

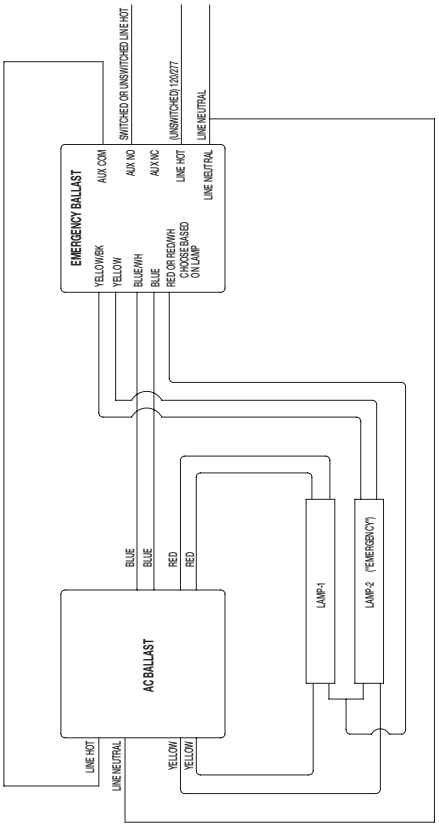

1 LAMP RAPID START

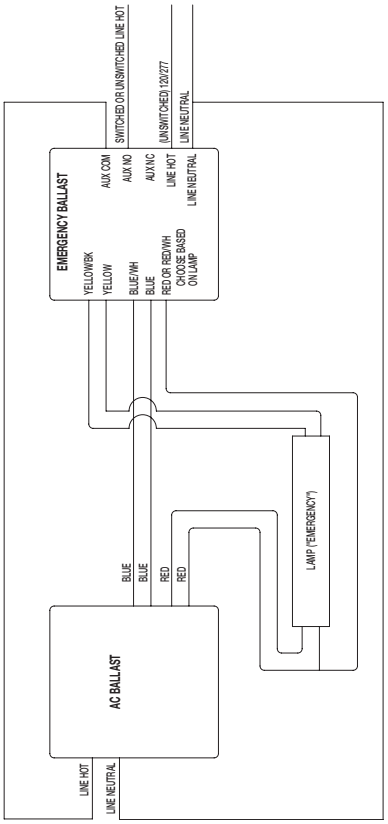

2 LAMP RAPID START SERIES / PARALLEL LAMP PARALLEL YELLOW FILAMENT

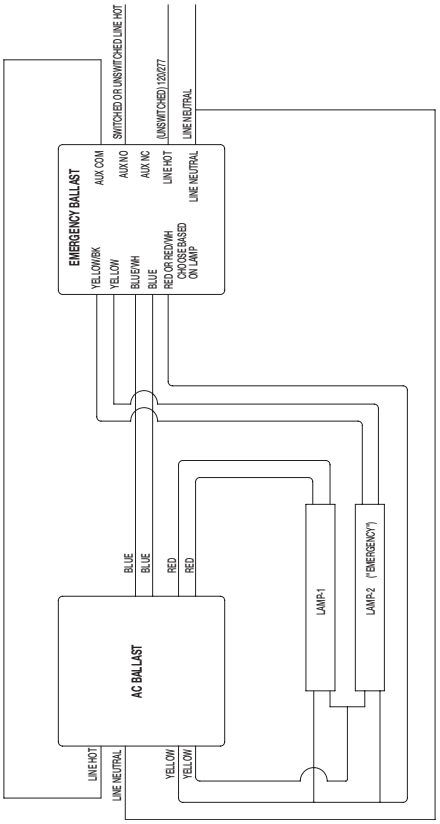

WIRING DIAGRAMS FOR 1-LAMP EMERGENCY OPERATION

TYPICAL SCHEMATICS ONLY. MAY BE USED WITH OTHER BALLAST. CONSULT THE FACTORY FOR OTHER WIRING DIAGRAMS

2 LAMP INSTANT START

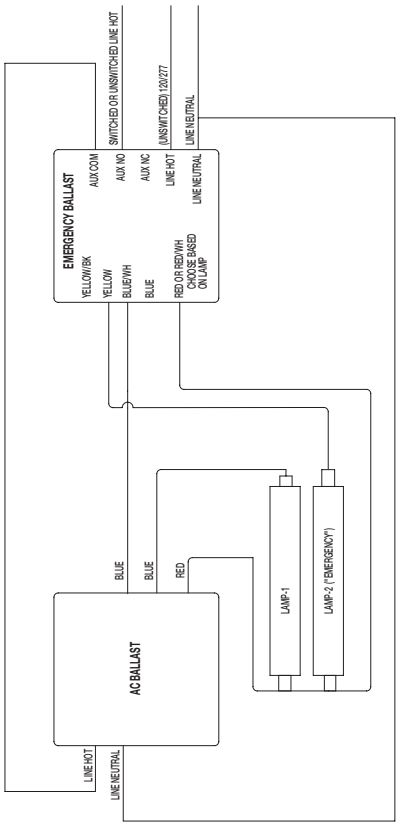

3 LAMP INSTANT START

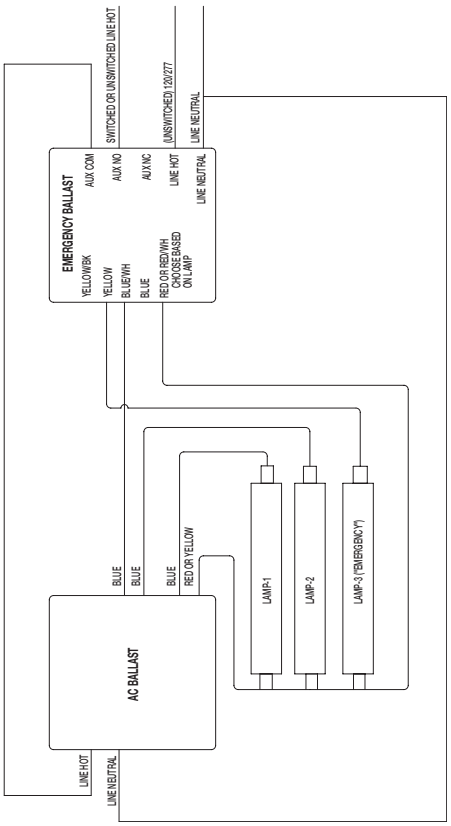

2 LAMP RAPID START OSRAM SYLVANIA SERIES LAMP PARALLEL YELLOW FILAMENT

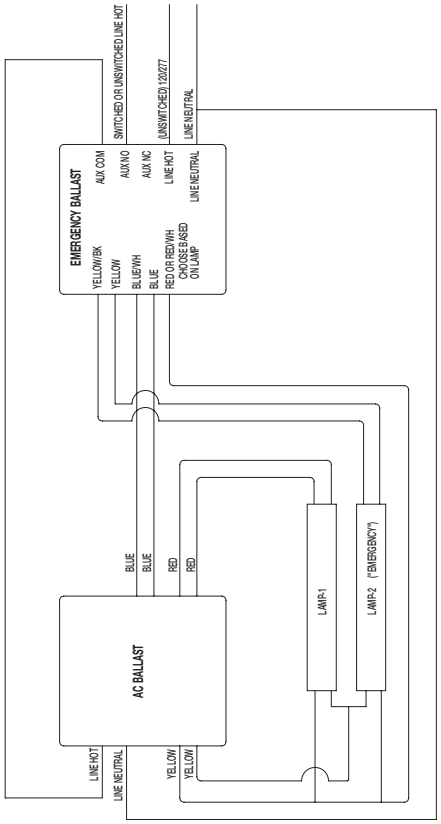

3 LAMP RAPID START SERIES LAMP PARALLEL YELLOW FILAMENT

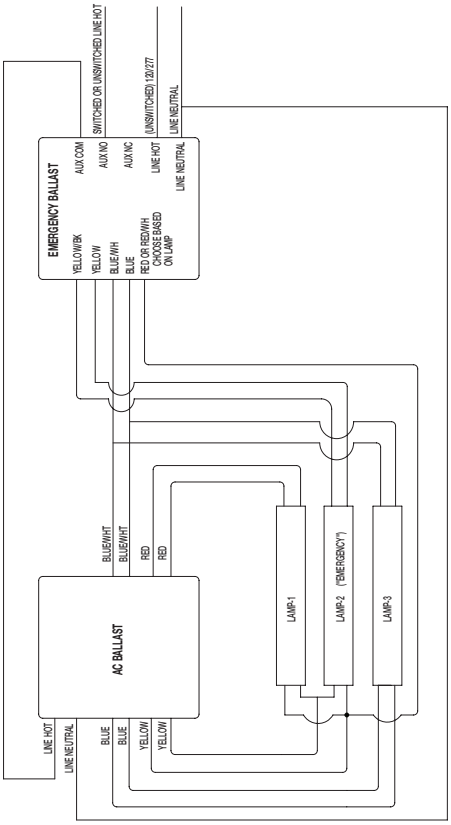

WIRING DIAGRAMS FOR 1-LAMP EMERGENCY OPERATION

TYPICAL SCHEMATICS ONLY. MAY BE USED WITH OTHER BALLAST. CONSULT THE FACTORY FOR OTHER WIRING DIAGRAMS

4 LAMP INSTANT START

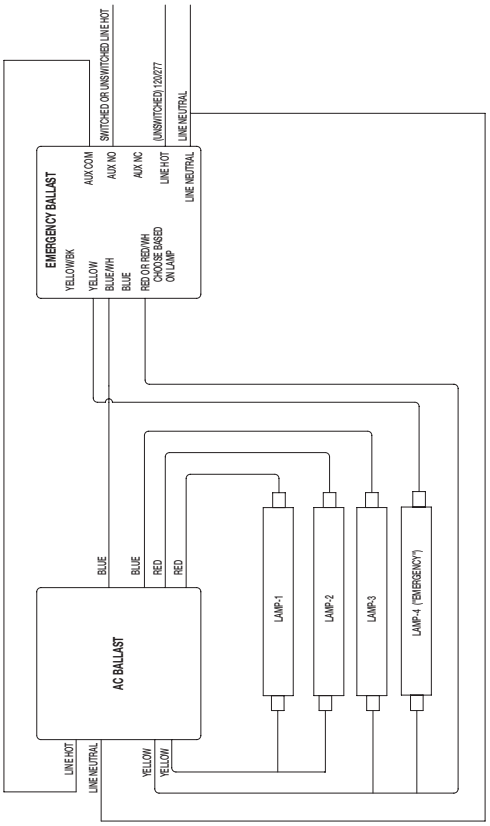

4 LAMP RAPID START PARALLEL LAMP PARALLEL YELLOW FILAMENT

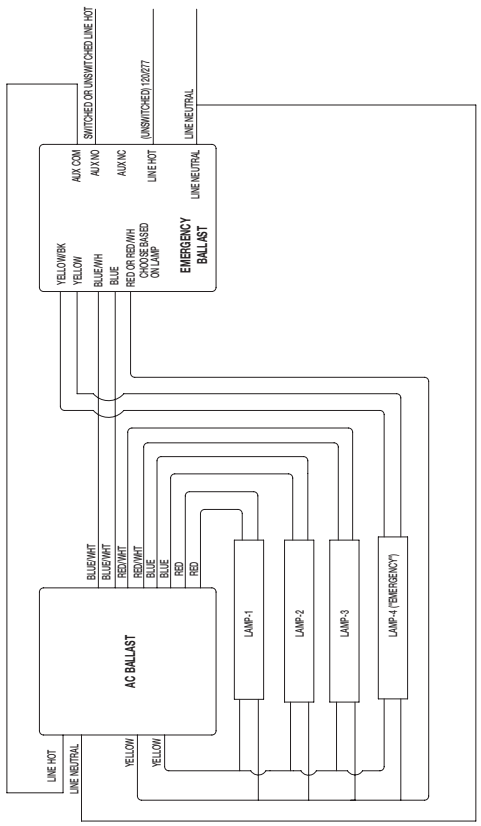

4 LAMP RAPID START SERIES LAMP PARALLEL YELLOW FILAMENT

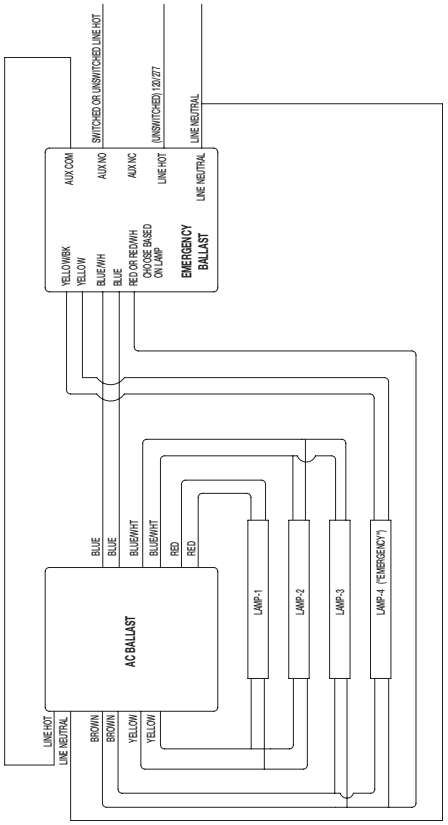

3 LAMP RAPID START PARALLEL LAMP PARALLEL YELLOW FILAMENT

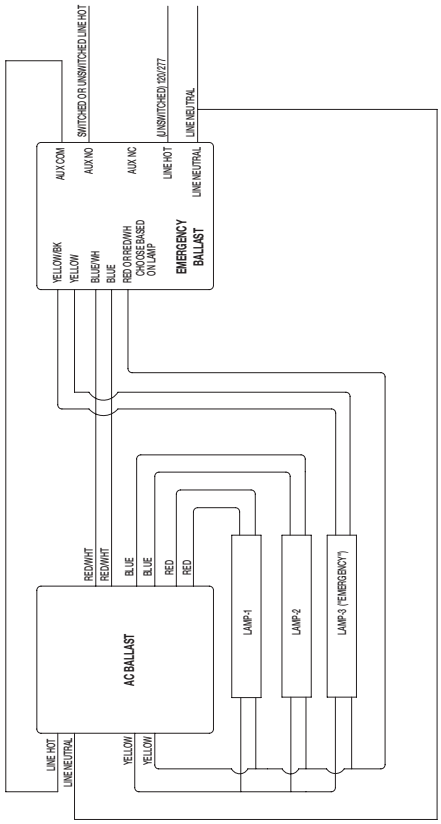

WIRING DIAGRAMS FOR 1-LAMP EMERGENCY OPERATION

TYPICAL SCHEMATICS ONLY. MAY BE USED WITH OTHER BALLAST. CONSULT THE FACTORY FOR OTHER WIRING DIAGRAMS

BI LEVEL BALLAST

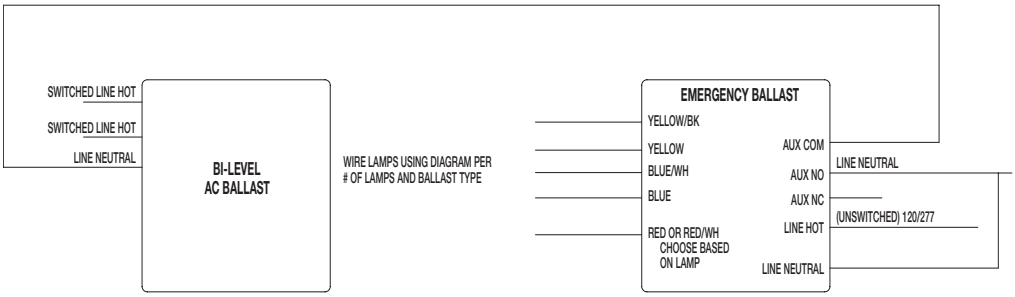

When using the auxillary relay to switch the neutral line, the Emergency and A.C. ballasts must be on the same branch circuit.

Warranties and Limitation of Liability

Please refer to **www.cooperlighting.com/WarrantyTerms** for our terms and conditions.

Eaton
1121 Highway 74 South
Peachtree City, GA 30269
P: 770-486-4800
www.eaton.com/lighting

Canada Sales
5925 McLaughlin Road
Mississauga, Ontario L5R 1B8
P: 905-501-3000
F: 905-501-3172

Powering Business Worldwide

© 2015 Eaton
All Rights Reserved
Printed in USA
Publication No. ADX142715
June 19, 2015 9:44 AM

Eaton is a registered trademark.
All trademarks are property
of their respective owners.

Product availability, specifications,
and compliances are subject to
change without notice