| | | | | | |
|---|---|---|---|---|---|
| Project | | Catalog # | | Type | |
| Prepared by | | Notes | | Date | |



# Lumark

## Night Harrier

Floodlight Luminaire

### Product Features

Light ARchitect™ · DUSK-TO-DAWN · MARKETPRO Stock Lighting Solutions · seleCCTable colors · Selectable lumens · BAA

### Product Certifications

ISO Certified · DLC Listed Premium · 1.5G VIB · FC Class A CAN ICES-005 · IK09 · IP65 · UL Certified · RoHS Compliant · 5 Year Limited Warranty

### Interactive Menu


- Ordering Information page 2
- Product Specifications page 2
- Mounting Details page 3
- Energy and Performance Data page 4


### Quick Facts

- Selectable CCT 3000K-4000K-5000K
- Selectable lumens 5,500-22,000
- Replaces 70W to 500W HID floodlights
- High efficiency: up to 145 lm/W
- Operates at -40°C to 40°C (-40°F to 104°F)
- Integral 6kV surge protection

## Dimensional Details

**Trunnion Mount**

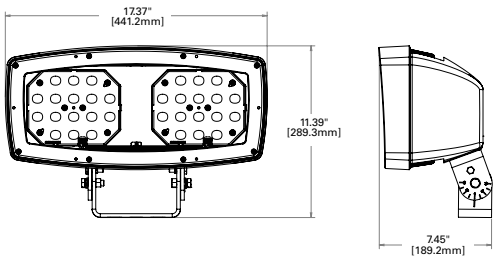


**Slipfitter Mount**

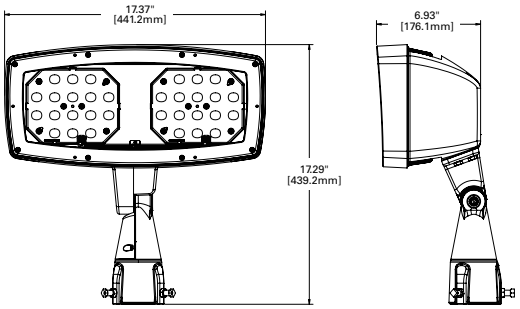

## Stock Ordering Information

| Model Number[1] | Lumens/Wattage | CCT Selectable | Voltage | Mounting | Controls |
|---|---|---|---|---|---|
| **NHRS50UT** | **Selectable Lumens:** 5,500 - 22,000 / 40-155W | 3000K-4000K-5000K / 70 CRI | 120 - 277V | Trunnion | - |
| **NHRS50US** | **Selectable Lumens:** 5,500 - 22,000 / 40-155W | | 120 - 277V | Slipfitter[2] | - |
| **NHRS50HT** | **Selectable Lumens:** 5,500 - 22,000 / 40-155W | | 347 - 480V | Trunnion | - |
| **NHRS50HS** | **Selectable Lumens:** 5,500 - 22,000 / 40-155W | | 347 - 480V | Slipfitter[2] | - |
| **NHRS50UT-BPC** | **Selectable Lumens:** 5,500 - 22,000 / 40-155W | | 120 - 277V | Trunnion | Button-type photocontrol |
| **NHRS50US-BPC** | **Selectable Lumens:** 5,500 - 22,000 / 40-155W | | 120 - 277V | Slipfitter[2] | Button-type photocontrol |

**NOTES:**
**1.** All stock models are NEMA 6H x 6V Wide Distribution and Carbon Bronze finish.
**2.** Fits 2-3/8" O.D. tenon, wire leads run through slipfitter.

## Ordering Information

**Sample Number:** NHRS50U33TBK-BPC

| Product Family [1,2] | Light Engine Configuration | Voltage | Distribution | Mounting | Finish | Options |
|---|---|---|---|---|---|---|
| **NHR** = Night Harrier Floodlight<br>**BAA-NHR** = Night Harrier Floodlight, BAA Buy American Act Compliant [3]<br>**TAA-NHR** = Night Harrier Floodlight, TAA Trade Agreements Act Compliant [3] | **S50** = Up to 500W HID Replacement, 4 position selectable lumens, 3 CCT Select (3000K-4000K-5000K) | **U**= Universal, 120-277V<br>**H**= High Voltage, 347-480V | **[Blank]**=NEMA 6H x 6V Wide<br>**33**=NEMA 3H x 3V Spot | **T**=Trunnion<br>**S**=Slipfitter | **[Blank]**=Carbon Bronze<br>**AP**= Grey<br>**BK**= Black<br>**BZ**=Textured Bronze<br>**DP**=Dark Platinum<br>**GM**=Graphite Metallic<br>**WH**=Textured White<br>**WT**=Summit White | **BPC**= Buttontype Photocontrol [4] |

**NOTES:**
**1.** DesignLights Consortium® Qualified. Refer to www.designlights.org Qualified Products List under Family Models for details.
**2.** Customer is responsible for engineering analysis to confirm pole and fixture compatibility for applications. Refer to installation instructions and pole white paper WP513001EN for additional support information.
**3.** Only product configurations with these designated prefixes are built to be compliant with the Buy American Act of 1933 (BAA) or Trade Agreements Act of 1979 (TAA), respectively. Please refer to DOMESTIC PREFERENCES website for more information. Components shipped separately, may be separately analyzed under domestic preference requirements.
**4.** Not available with H (347-480V) Voltage option.

## Accessory Ordering Information

| Accessories (Order Separately) [2,3,5] |
|---|
| **NHR50-TS2-XX** = Top and Side Visors [1,4]<br>**NHR50-WG** = Wire Guard [4]<br>**NHR50-LK-XX** = Lens Kit [1]<br>**NHR50-SK-XX** = Slipfitter Kit [1] |

**NOTES:**
**1.** Replace XX with paint color.
**2.** For BAA or TAA requirements, Accessories sold separately will be separately analyzed under domestic preference requirements. Consult factory for further information.
**3.** Accessories sold separately will be separately analyzed under domestic preference requirements. Consult factory for further information.
**4.** Cannot combine NHR50-TS2 (Top and Side Visor) and WG (Wire Guard), limited to one external guard per fixture.
**5.** Order accessories as separate items for field installation. Refer to standard ordering information to add options. Refer to In-Stock Guide for availability.

## Product Specifications

### Construction
- Die-cast aluminum housing
- Durable powder coated surface
- Fully sealed tempered glass

### Controls
- Selectable configurations offer internal toggle switches for adjusting luminaire CCT and lumens.
- Default settings for selectable luminaires are 4000K CCT and maximum lumen output.
- Optional integrated button-type photocontrol for dusk-to-dawn operation.
- To disable the photocontrol, place the provided cap over the sensor.

### Electrical
- -40°C minimum operating temperature
- 40°C maximum operating temperature
- >.9 power factor
- <20% total harmonic distortion
- Class 2 driver incorporates internal fusing designed to withstand 6kV surge

### Mounting
- Slipfitter:
  Suitable for 2-3/8" OD tenons.
- Trunnion:
  Suitable for mounting within 4' (1.2 m) of the ground.

### Finish
- Carbon Bronze standard / other colors available

### Typical Applications
- Facade
- Wall washing
- Landscape lighting
- Building lighting
- Sign lighting
- Commercial lighting

### EPA
- Effective Projected Area (Sq. Ft.):
  EPA 1.25

### Shipping Data
- Case Dimensions and Approximate Net Weight:
  18.85 x 17.85 x 8.35 (in) | 26 lbs.
- Full pallet Dimensions and Approximate Net Weight:
  37.7 x 35.7 x 41.75 (in) | 520 lbs.
  Maximum pallet height: 55 in.
  Pallet qty: 20
  Layers x Cases: 4 x 5

### Warranty
- Standard five-year warranty WITH Five year limited warranty, consult website for details.
  www.cooperlighting.com/legal

## Mounting Details

### Mounting Types

#### Trunnion Mount

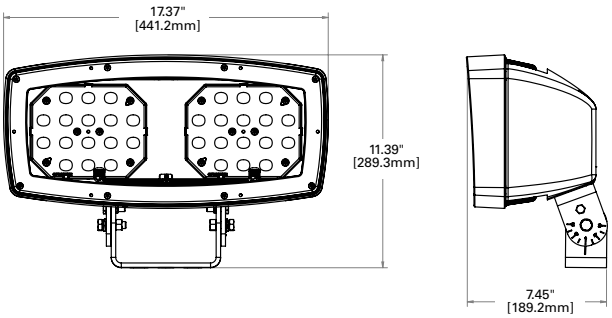


#### Slipfitter Mount

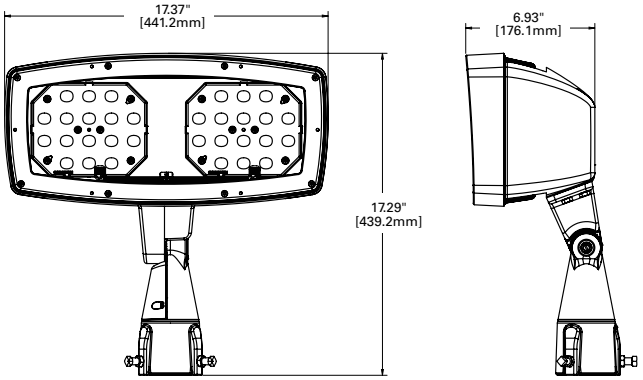


### Mounting hole pattern

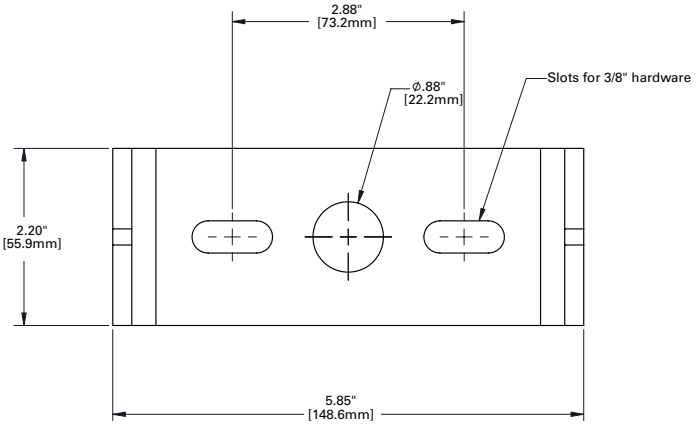

## Energy and Performance Data

### Power and Lumens

| | 6x6 | | | 3x3 | | |
|---|---|---|---|---|---|---|
| **S50** | **NHRS50730** | **NHRS50740** | **NHRS50750** | **NHRS50730** | **NHRS50740** | **NHRS50750** |
| **Power(Watts)** | 154 | 150 | 155 | 154 | 150 | 155 |
| **Lumens** | 19074 | 21718 | 20645 | 17922 | 20287 | 19309 |
| **Lumens per Watt** | 124.20 | 145.10 | 133.50 | 116.60 | 135.70 | 124.90 |
| **Input Current @ 120V (A)** | 1.28 | 1.25 | 1.29 | 1.28 | 1.25 | 1.29 |
| **Input Current @ 277V (A)** | 0.55 | 0.54 | 0.56 | 0.55 | 0.54 | 0.56 |
| **Input Current @ 347V (A)** | 0.44 | 0.43 | 0.45 | 0.44 | 0.43 | 0.45 |
| **Input Current @ 480V (A)** | 0.32 | 0.31 | 0.32 | 0.32 | 0.31 | 0.32 |

### Lumen Maintenance

| Ambient Temperature | TM-21 Lumen Maintenance 50,000 hours* | Theoretical L70 (Hours) |
|---|---|---|
| Up to 40°C | 94.18% | > 60,000 |

### Lumen Multiplier

| Ambient Temperature | Lumen Multiplier |
|---|---|
| 10°C | 1.04 |
| 15°C | 1.02 |
| 25°C | 1.00 |
| 40°C | 0.96 |

### Selectable Lumen Settings

| Dim Switch Position | Percent of Typical Lumen Output |
|---|---|
| 25 | 25% |
| 50 | 50% |
| 75 | 75% |
| 100 | 100% |



**Cooper Lighting Solutions**
1121 Highway 74 South
Peachtree City, GA 30269
P: 770-486-4800
www.cooperlighting.com

© 2023 Cooper Lighting Solutions
All Rights Reserved.

Specifications and dimensions subject to change without notice.