Project		Catalog #		Type	
Prepared by		Notes		Date	



HALO

CEZ6125
CEZ6126

6” Canless EZ-Trim
Lamp-based direct mount
15W Maximum

Typical Applications

• Residential • Light Commercial

Interactive Menu

- Order Information page 2
- Product Specifications page 2
- Product Warranty

Product Certification

RoHS COMPLIANT · UL CERTIFIED

Product Features

air-tite · GU24 · E26

Top Product Features

- Baffle trim
- Direct mount – does not require recessed housing or junction box
- Option for GU24 or E26 lamp base, use with compatible LED lamps (sold by others)
- Air-tite, for use in insulated and non-insulated ceilings
- Shallow version suitable for 2x6 residential framing or shallow plenum commercial construction

Dimensional and Mounting Details

CEZ6125E26WBICAT

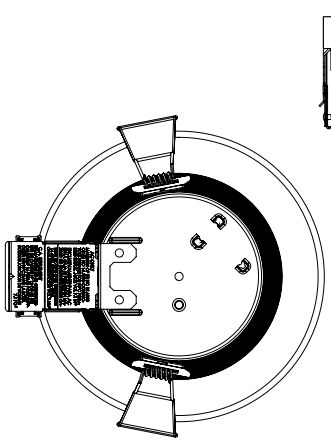

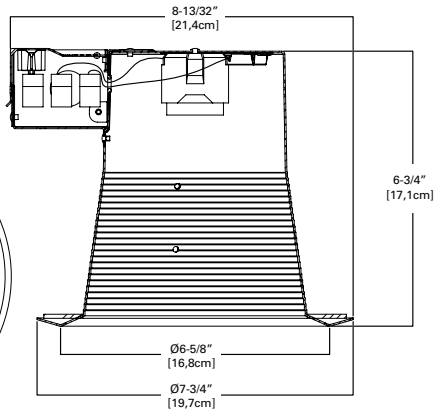

CEZ6125GU24WBICAT

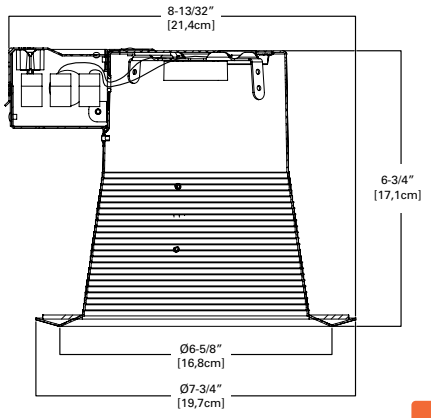

additional product diagrams

Order Information

SAMPLE ORDER NUMBER: **CEZ6125E26WBICAT**

A complete luminaire consists of a Canless EZ-Trim lamp-based direct mount and a compatible lamp (sold by others).

Model	Lamp Base	Trim Type	Certifications	Accessories (sold separate)
CEZ6125 = 6-inch Canless EZ-Trim **CEZ6126** = 6-inch Shallow Canless EZ-Trim	**E26** = E26 base **GU24** = GU24 base	**WB** = White flange, white baffle trim	**ICAT** = IC rated, air-tite	**HL6RSMF** = 6" new construction round/ square mounting frame
Notes	**Notes**	**Notes**	**Notes**	**Notes**

Compatible LED Lamps

- A19 LED, E26 base
- PAR38 LED, E26 base (CEZ6125 only)
- BR40 LED, E26 base (CEZ6125 only)
- BR30 LED, E26 base
- PAR30L LED, E26 base
- PAR30S LED, E26 base
- R30 LED, E26 base
- A19 LED, GU24 base
- PAR38 LED, GU24 base (CEZ6125 only)
- BR40 LED, GU24 base (CEZ6125 only)
- BR30 LED, GU24 base
- PAR30L LED, GU24 base
- PAR30S LED, GU24 base
- R30 LED, GU24 base

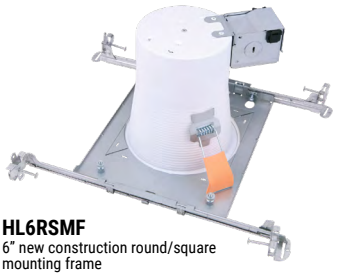

HL6RSMF
6" new construction round/square mounting frame

Product Specifications

Trim
- Durable metal baffle trim

Lamp Compatibility
- For use with maximum 15W LED lamps
- Option for GU24 or E26 lamp base

Installation
- Can be installed in 1/2" to 1-1/4" thick ceilings
- Shallow version suitable for 2x6 residential framing or shallow plenum commercial construction
- Heat treated springs hold fixture fitting securely in the ceiling eliminating light leaks
- Can be removed from below the ceiling for service or replacement
- Can be used with Halo new construction mounting frames

Junction Box
- Compact galvanized steel junction box
- Listed for (10) #12 AWG 90˚ C splice conductors
- Hinged door is retained and provides easy access to field wiring
- (2) ½" conduit pry-outs positioned to allow straight conduit runs
- (2) Slide-N-Side™ non-metallic (NM) wire traps allow wiring outside the box
- Accepts 14-2, 14-3, 12-2, 12-3 U.S. and 14-2, 14-3, 12-2 Canadian NM cable
- (3) 4-port push wire nuts with clear caps for quick and reliable mains voltage connections

Compliance
- Type IC thermally protected, suitable for direct contact to air permeable insulation and cULus listed for damp locations
- Not for use in direct contact with spray foam insulation, consult NEMA LSD57-2013
- Air-tite per ASTM-E283
- Can be used for State of California Title 24 high efficacy luminaire compliance with CA JA8-2016-E or JA8-2019-E labeled lamps
- Suitable for use in clothes closets when installed in accordance with the NEC 410.16 spacing requirements
- Contains no mercury or lead and RoHS compliant

Warranty
- One-year limited warranty, consult website for details. www.cooperlighting.com/legal

Dimensional and Mounting Details

CEZ6126E26WBICAT

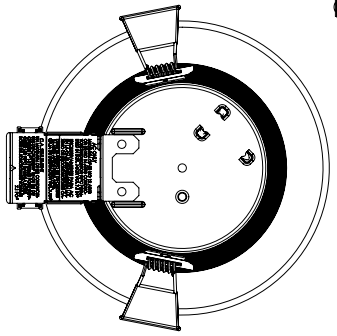

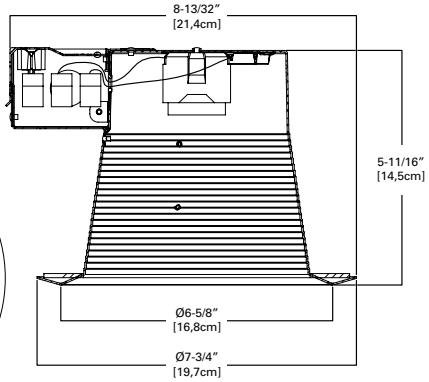

CEZ6126GU24WBICAT

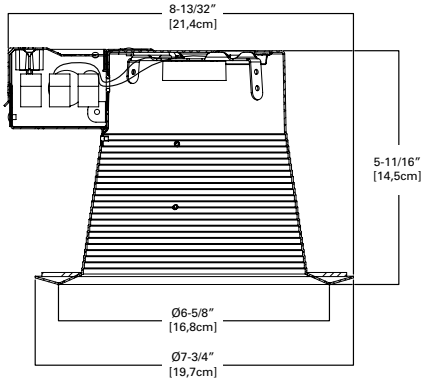

Cooper Lighting Solutions
1121 Highway 74 South
Peachtree City, GA 30269
P: 770-486-4800
www.cooperlighting.com

© 2021 Cooper Lighting Solutions
All Rights Reserved.

Specifications and dimensions subject to change without notice.