RL-DM Night Light Downlight

Dimming Guide and Step-down Transformer Application Note

HALO

The RL-DM Night Light LED Series provides continuous dimming with reverse or forward phase cut dimmers.

RL4DM Night Light
RL4069NLWHDMR

RL6DM Night Light
RL6069NLWHDMR

5 seleCCTable™ colors

Phase Control Dimming

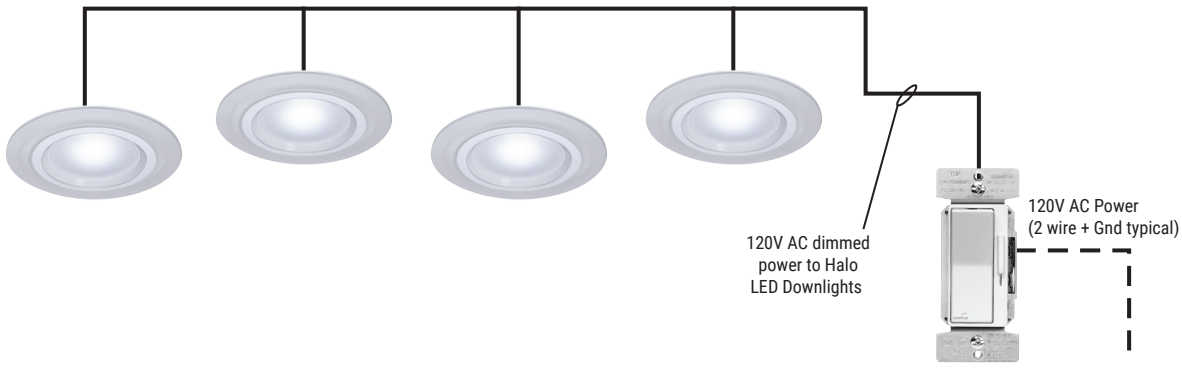

HALOHOME™



HALO Home In-wall Smart Dimmer
HIWMA1BLE40AWH

Controls standard lighting fixtures with dimmer or HALO Home mobile app.
Features include:

- ON/OFF
- Dim
- Group
- Scene
- Schedule

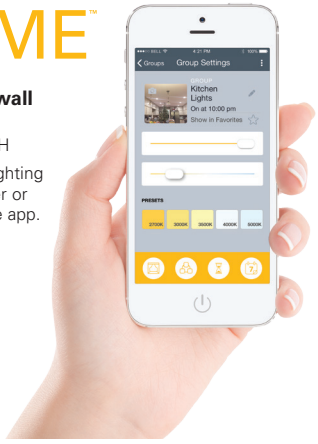

LED Rated

Dimmer Make	Dimmer Series	Dimmer Model #	Minimum Luminaires (per circuit)	Maximum Recommended Luminaires (per circuit)	Min Dimming percentage (%)	Max Dimming percentage (%)	Low End Start Time
Cooper Lighting Solutions	Halo Home	HIWMA1BLE40AWH	1	28	3%	100%	<1s

Reference

Dimmer Make	Dimmer Series	Dimmer Model #	Minimum Luminaires (per circuit)	Maximum Recommended Luminaires (per circuit)	Min Dimming percentage (%)	Max Dimming percentage (%)	Low End Start Time
Leviton	Decora	6672	1	56	4%	98%	<1s
Leviton	SureSlide	6674	1	14	7%	98%	<1s
Leviton	SureSlide	DSL06-ILZ	1	56	7%	98%	<1s
Leviton	Illumatech	IPL06-ILZ	1	14	6%	97%	<1s
Eaton	Halo Home	HIWMA1BLE40AWH	1	28	3%	100%	<1s
Leviton	Decora	TSL06-1LW	1	47	5%	100%	<1s
Leviton	SureSlide	RDL06-1OZ	1	56	4%	100%	<1s
Lutron	Toggler	TG-600P	1	56	0%	96%	>1s[1]
Eaton	RF Smart	RF9540-N	1	28	4%	100%	<1s
Lutron	Toggler	TGCL-153P	1	14	2%	96%	<1s
Lutron	Lumea	LG600P	1	56	0%	97%	>1s[1]
EWD	Universal	TUL06P-C2	1	28	3%	98%	<1s
EWD	Universal	SUL06P	1	28	2%	98%	<1s
Lutron	Skylark	SCL-153P-WH	1	14	2%	95%	<1s
Lutron	Diva	DV603P	1	56	0%	96%	>1s[1]
Lutron	Diva	DVCL-153P	1	14	2%	95%	<1s
Lutron	Maestro	MACL-153-M	1	14	6%	89%	<1s
Leviton	Vizia	VPE06	1	56	6%	100%	<1s
Leviton	Legrand	H703PTU	1	28	4%	100%	<1s
Leviton	Vizia	VZE04	1	37	7%	100%	<1s
Leviton	Acenti	ATX10	1	94	5%	100%	<1s
Lutron	Maestro	MAELV600	1	56	8%	99%	<1s
Lutron	Faedra	FAELV500	1	47	0%	99%	>1s[1]
Lutron	Diva	DVELV303P	1	28	4%	99%	<1s
Lutron	Skylark	SELV300P	1	28	4%	99%	<1s
EWD	Smart	AAL06	1	28	8%	98%	<1s
Lightolier	Sunrise	ZP260QEW	1	24	4%	97%	<1s
Eaton	Aspire	9530AW	1	56	0%	99%	>1s[1]
Eaton	Skye	SF8AP	1	90	14%	99%	<1s
Eaton	Devine	DE06P	1	56	1%	88%	<1s
Eaton	React	RI061	1	56	0%	100%	>1s[1]
Eaton	Devine	TAL06P	1	28	2%	98%	<1s
Eaton	Toggle	DAL06P	1	28	3%	98%	<1s
Eaton	Skye	SAL06P	1	28	3%	98%	<1s
Eaton	Skye	SLC03P	1	28	2%	98%	<1s
Eaton	Devine	DLC03P	1	28	1%	98%	<1s
Eaton	Toggle	TI061	1	56	0%	82%	>1s[1]
Lutron(PANEL)	LCP128 (TRIAC)	LP-RPM-4U-120	1	180	0%	99%	>1s[1]
Lutron(PANEL)	LCP128 (ELV)	LP-RPM-4A-120	1	112	0%	98%	>1s[1]
Ecospec(PANEL)	LDCM	LDCM-PL-120-277-010V-GR	1	42	0%	100%	>1s[1]
Lutron	Ariadni	AY-600P	1	56	0%	97%	>1s[1]
Lutron	Contour	CT-103P	1	94	0%	98%	>1s[1]
Lutron	Contour	CT-600P	1	56	0%	98%	>1s[1]
Lutron	Rotary	D-600P	1	56	0%	96%	>1s[1]
Lutron	Diva	DV-600P	1	56	0%	97%	>1s[1]
Lutron	Glyder	GL-600P	1	56	0%	97%	>1s[1]
Lutron	Lumia	LG-600PH	1	56	0%	97%	>1s[1]
Lutron	Maestro	MA-600	1	56	9%	99%	<1s
Lutron	Nova	N-600	1	56	0%	98%	>1s[1]
Lutron	Skylark	S-600P	1	56	0%	96%	>1s[1]
Lutron	Centurion	C-600P	1	56	0%	97%	>1s[1]
Lutron	Ariadni	AYLV-600P	1	42	0%	96%	>1s[1]
Lutron	Glyder	GLV-600	1	42	0%	97%	>1s[1]
Lutron	Diva	DVLV-600P	1	42	0%	95%	>1s[1]
Lutron	Lumina	LG-103P	1	94	0%	96%	>1s[1]
Lutron	Skylark	SLV-600P	1	42	0%	96%	>1s[1]
EWD	Universal	DUL06P-C7	1	28	3%	95%	<1s
Lutron	Nova	NTLV-600	1	28	4%	97%	<1s
Lutron	Nova	NT-600	1	42	0%	97%	>1s[1]

1. Dim to off.

LED Rated

Dimmer Make	Dimmer Series	Dimmer Model #	Minimum Luminaires (per circuit)	Maximum Recommended Luminaires (per circuit)	Min Dimming percentage (%)	Max Dimming percentage (%)	Low End Start Time
Cooper Lighting Solutions	Halo Home	HIWMA1BLE40AWH	1	20	3%	98%	<1s

Reference

Dimmer Make	Dimmer Series	Dimmer Model #	Minimum Luminaires (per circuit)	Maximum Recommended Luminaires (per circuit)	Min Dimming percentage (%)	Max Dimming percentage (%)	Low End Start Time
Leviton	Decora	6672	1	41	3%	97%	<1s
Leviton	SureSlide	6674	1	10	6%	97%	<1s
Leviton	SureSlide	DSL06-ILZ	1	41	5%	98%	<1s
Leviton	Illumatech	IPL06-ILZ	1	10	5%	97%	<1s
Eaton	Halo Home	HIWMA1BLE40AWH	1	20	3%	98%	<1s
Leviton	Decora	TSL06-1LW	1	34	5%	99%	<1s
Leviton	SureSlide	RDL06-1OZ	1	41	3%	100%	<1s
Lutron	Toggler	TG-600P	1	41	0%	93%	>1s[1]
Lutron	Nova T	NTFTU-6A	1	41	18%	100%	<1s
Eaton	RF Smart	RF9540-N	1	20	4%	99%	<1s
Lutron	Maestro	MAW600	1	41	7%	99%	<1s
Lutron	Toggler	TGCL-153P	1	10	2%	96%	<1s
Lutron	Lumea	LG600P	1	41	0%	97%	>1s[1]
EWD	Universal	TUL06P-C2	1	20	2%	96%	<1s
EWD	Universal	SUL06P	1	20	2%	96%	<1s
Lutron	Skylark	SCL-153P-WH	1	10	2%	95%	<1s
Lutron	Diva	DV603P	1	41	0%	97%	>1s[1]
Lutron	Diva	DVCL-153P	1	10	2%	95%	<1s
Lutron	Maestro	MACL-153-M	1	10	6%	88%	<1s
Leviton	Vizia	VPE06	1	41	4%	100%	<1s
Leviton	Legrand	H703PTU	1	20	4%	100%	<1s
Leviton	Vizia	VZE04	1	27	6%	100%	<1s
Leviton	Acenti	ATX10	1	69	5%	99%	<1s
Lutron	Maestro	MAELV600	1	41	6%	99%	<1s
Lutron	Diva	DVELV303P	1	20	3%	98%	<1s
Lutron	Skylark	SELV300P	1	20	3%	98%	<1s
EWD	Smart	AAL06	1	20	6%	98%	<1s
Lightolier	Sunrise	ZP260QEW	1	18	4%	97%	<1s
Eaton	Aspire	9530AW	1	41	0%	100%	>1s[1]
Eaton	Skye	SF8AP	1	66	16%	100%	<1s
Eaton	Devine	DE06P	1	41	1%	88%	>1s
Eaton	React	RI061	1	41	0%	100%	>1s[1]
Eaton	Devine	TAL06P	1	20	2%	100%	<1s
Eaton	Toggle	DAL06P	1	20	2%	100%	<1s
Eaton	Skye	SAL06P	1	20	2%	99%	<1s
Eaton	Skye	SLC03P	1	20	2%	98%	<1s
Eaton	Devine	DLC03P	1	20	1%	99%	<1s
Eaton	Toggle	TI061	1	41	0%	81%	>1s[1]
Lutron(PANEL)	LCP128 (TRIAC)	LP-RPM-4U-120	1	133	0%	100%	>1s[1]
Lutron(PANEL)	LCP128 (ELV)	LP-RPM-4A-120	1	83	0%	99%	>1s[1]
Ecospec(PANEL)	LDCM	LDCM-PL-120-277-010V-GR	1	31	0%	100%	>1s[1]
Lutron	Ariadni	AY-600P	1	41	0%	97%	>1s[1]
Lutron	Contour	CT-103P	1	69	0%	97%	>1s[1]
Lutron	Contour	CT-600P	1	41	0%	96%	>1s[1]
Lutron	Rotary	D-600P	1	41	0%	94%	>1s[1]
Lutron	Diva	DV-600P	1	41	0%	96%	>1s[1]
Lutron	Glyder	GL-600P	1	41	0%	96%	>1s[1]
Lutron	Lumia	LG-600PH	1	41	0%	96%	>1s[1]
Lutron	Maestro	MA-600	1	41	7%	95%	<1s
Lutron	Nova	N-600	1	41	0%	96%	>1s[1]
Lutron	Skylark	S-600P	1	41	0%	95%	>1s[1]
Lutron	Centurion	C-600P	1	41	0%	99%	>1s[1]
Lutron	Ariadni	AYLV-600P	1	31	0%	98%	>1s[1]
Lutron	Glyder	GLV-600	1	31	0%	99%	>1s[1]
Lutron	Diva	DVLV-600P	1	31	0%	95%	>1s[1]
Lutron	Lumina	LG-103P	1	69	0%	96%	>1s[1]
Lutron	Skylark	SLV-600P	1	31	0%	96%	>1s[1]
EWD	Universal	DUL06P-C7	1	20	2%	94%	<1s
Lutron	Nova	NTLV-600	1	20	3%	97%	<1s
Lutron	Nova	NT-600	1	31	1%	98%	<1s

1. Dim to off.

Dimmer Notes:

1) Start time is measured at the lowest dimmer setting.

2) Some LED dimmers have a "rapid start" design used to provide a momentary power boost to LED and CFL lamps during start-up. When a LED luminaire is on a dimmer with "rapid start" the boost may cause a momentary flash of the LED lighting. This "flash" is generated by the dimmer, and may be more noticeable when the dimmer is at a low setting. A solution is available with EATON dimmers which provide adjustment capability of the "rapid start": Devine (DAL06P), Accell (AAL06P), and Trace (TAL06P). Refer to product specifications online at www.eaton.com for more details.

Dimming Guide Disclaimer:

1) Leviton® is a registered trademark of Leviton Manufacturing Co. Inc.; Lutron® is a registered trademark of Lutron Electronics Co. Inc.; Lightolier® is a registered trademark of Philips Lighting; Hubbell® is a registered trademark of Hubbell Incorporated; Legrand® and Pass & Seymour® are registered trademarks of Legrand®; Eaton® is a registered trademark of Eaton Corporation. These companies and their tradenames, trademarks or brands, where noted, are associated with their respective company and are not associated with Cooper Lighting Solutions.

2) Testing conducted by Cooper Lighting Solutions is not a substitute for and does not imply certification by an independent laboratory or any other standards certification. Refer to the manufacturer specifications for more detailed information on product certifications and standards.

3) This is a representative list of typical dimmers as tested by Cooper Lighting Solutions for performance with the designated LED luminaires only. Test data contained in this literature is based upon dimmers obtained in the marketplace. Information about these other manufacturers products is obtained from packaging and published information made available by the manufacturer and is deemed to be reliable, but has not been verified. Dimmer performance and perceived limitations of the dimmers are based on factors outside of Cooper Lighting Solutions' control. The specifications of these dimming controls and their conditions of use may change without notice to Cooper Lighting Solutions or any other user. Cooper Lighting Solutions makes no specific recommendation on product selection and
there are no warranties of performance or compatibility implied. Installer must ensure proper local and national electrical codes are followed; and that the dimmer application and condition of use is per dimmer manufacturer instructions and guidelines.

Application Note - H277, H347 and H347200 step-down transformers are qualified to drive multiple Halo LED on a single circuit in Non-IC construction. Installation of these transformers with individual LED fixtures on circuits with multiple LED loads is not recommended. This is not recommended due to resulting multiple inductive currents pulled by each transformer; in this situation the majority of the power would then be reactive (VARS) and not real (WATTS). If H277, H347 or H347200 transformers should be used individually on each LED fixture in a single circuit, then that circuit should be sized for lowered power factor as well as increased apparent power on the circuit. H277, H347 and H347200 are UL/cUL listed for use with Halo recessed housings: H750T, H750TCP, H7T, H7TNB, H7RT.

Step Down Transformers

H277 = Steps 277 line voltage down to 120 volts. Attaches to knockout on first fixture's junction box in a circuit and is 300VA rated. H277 is a UL recognized Component listed under the luminaire UL/cUL listing for Halo Non-IC housings.

H347 and H347200 = Steps 347 line voltage down to 120 volts. Attaches to knockout on first fixture's junction box in a circuit. H347 is 75VA and H347200 is 200VA rated. H347 is a CSA/UL Listed Component for use under the luminaire UL/cUL listing with Halo Non-IC housings.

Transformer Load - H277 (300VA)

1. H277 Transformer at full loading consumes a maximum of 16W of power.
2. When a dimmer or switch is on the secondary (120V) side of the transformer, power is consumed by the transformer when the dimmer or switch is in "OFF" mode at 6.5W and in "ON" mode at 16W maximum under full loading.
3. When a dimmer or switch is on the primary (277V) side ahead of the transformer, power is consumed only in "ON" mode to a maximum of 16W under full loading.
   (Use of a dimmer ahead of the transformer is not recommended)

Transformer Load - H347 (75VA)

1. H347 Transformer at full loading consumes a maximum of 15W of power.
2. When a dimmer or switch is on the secondary (120V) side of the transformer, power is consumed by the transformer when the dimmer or switch is in "OFF" mode at 2.5W and in "ON" mode at 15W maximum under full loading.
3. When a switch is on the primary (347V) side ahead of the transformer, power is consumed only in "ON" mode to a maximum of 15W under full loading.
   (Use of a dimmer ahead of the transformer is not recommended)

Transformer Load - H347200 (200VA)

1. H347200 Transformer at full loading on 120V side consumes a maximum of 28W of power.
2. When a dimmer or switch is on the secondary (120V) side of the transformer, power is consumed by the transformer when the dimmer or switch is in "OFF" mode at 9.2W and in "ON" mode at 28W maximum under full loading.
3. When a switch is on the primary (347V) side ahead of the transformer, power is consumed only in "ON" mode to a maximum of 28W under full loading.
   When a switch is on the primary (277V) side ahead of the transformer, power is consumed only in "ON" mode to a maximum of 12W under full loading.
   (Use of a dimmer ahead of the transformer is not recommended)

HLB Retrofit LED Downlight Series

(HLB Maximum Units on Step Down Transformer Powered Circuits)

Transformer	VA Rating	Max # of Fixtures 600 Series	Max # of Fixtures 900 Series
H277	300	24	16
H347	75	6	4
H347200	200	16	10

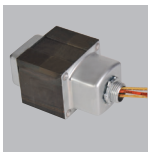

H277
277V Step Down Transformer, 300VA

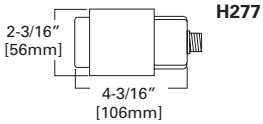



H347
347V Step Down Transformer, 75VA

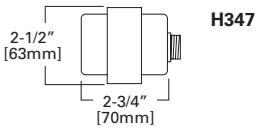



H347200
347V Step Down Transformer, 200VA

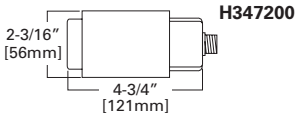

Transformer with Dimmer/Switch on 120V Secondary

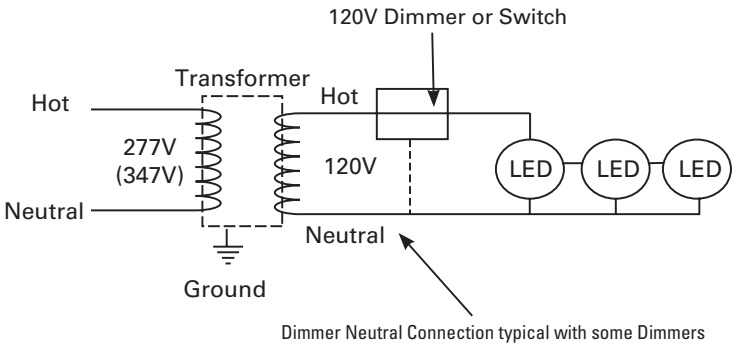

Transformer with Switch on 277V Primary

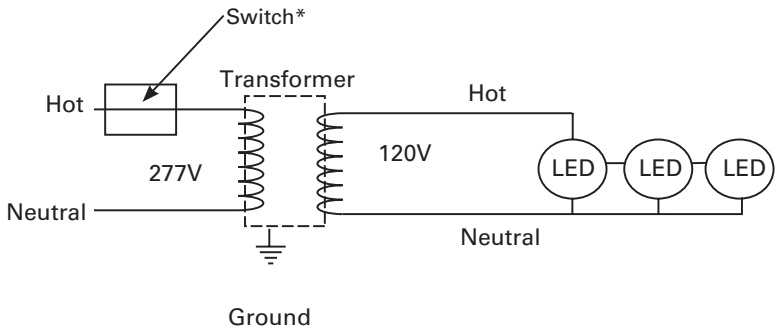

*Use of a dimmer ahead of the transformer is not recommended

Transformer with Switch on 347V Primary

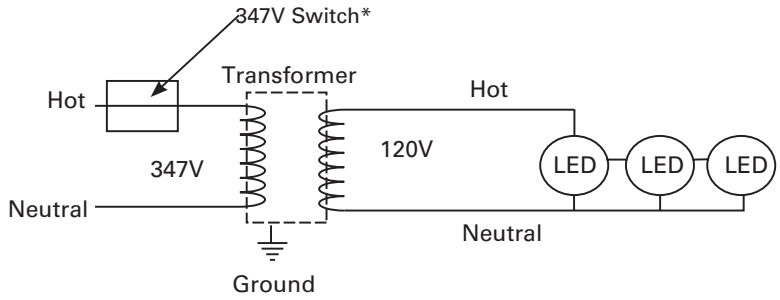

*Use of a dimmer ahead of the transformer is not recommended

Cooper Lighting Solutions
1121 Highway 74 South
Peachtree City, GA 30269
P: 770-486-4800
www.cooperlighting.com

© 2021 Cooper Lighting Solutions
All Rights Reserved.

Specifications and dimensions
subject to change without notice.