SMD 1200 LM – Surface LED Downlight Series

Dimming Guide and Step-down Transformer Application Note

HALO

The SMD 1200 LED Series provides continuous dimming with reverse or forward phase cut dimmers; as low as 5% depending upon dimmer and low-end trim of the dimmer.

SMD6-1200

SMD6R12927WH
SMD6R12930WH
SMD6R12935WH
SMD6R12940WH
SMD6R12950WH

SMD6S12927WH
SMD6S12930WH
SMD6S12935WH
SMD6S12940WH
SMD6S12950WH

SMD6-1200-UNV

SLD612827WHUNVJB
SLD612830WHUNVJB
SLD612835WHUNVJB
SLD612840WHUNVJB

SLD612927WHUNVJB
SLD612930WHUNVJB
SLD612935WHUNVJB
SLD612940WHUNVJB

Recessed Housing Installation

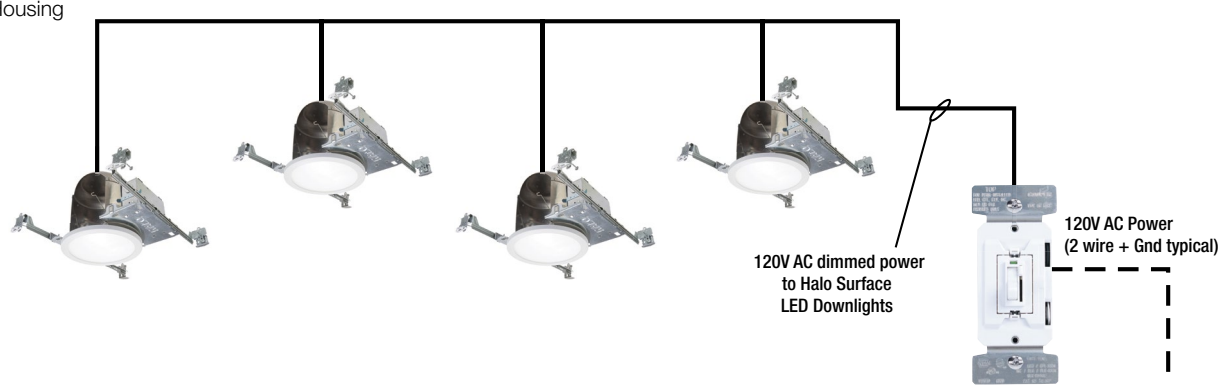

0-10V Dimmer - For Reference Only

Dimmer Make	Dimmer Series	Dimmer Model #	Type of Dimmer	Minimum Luminaire	Maximum Luminaire (120V)	Maximum Luminaire (277V)	Max Dimming Range (%)	Minimum Dimming Range(%)	Low End Start Time
Eaton	Slide Dimmer	SF10P	0-10v	1	61	84	100	3	>1s
Eaton	Decorator Dimmer	DF10P	0-10v	1	61	84	100	2	>1s
Leviton	Illumatech	IP710-DL	0-10v	1	48	48	100	2	>1s
Lutron	NTFTV	NOVA T	0-10v	1	51	51	100	3	>1s
Lutron	DIVA	DVTV	0-10v	1	51	51	100	2	>1s
Cooper Lighting Solutions	iLumin	SC277-06	0-10v	1	97	172	100	2	>1s
Cooper Lighting Solutions	Greengate	CK4A	0-10v	1	122	172	100	2	>1s

LED Rated Dimmers

Dimmer Make	Dimmer Series	Dimmer Model #	Minimum Luminaires (per circuit)	Maximum Recommended Luminaires (per circuit)	Min Dimming percentage (%)	Max Dimming percentage (%)	Low End Start-up time
Lutron	Diva	C·L wall-mount dimmers (T1, T4, T5, T8)	1	9	12%	95%	<1s
Lutron	Skylark	C·L wall-mount dimmers (T1, T4, T5, T8)	1	9	12%	95%	<1s
Lutron	Skylark Contour	C·L wall-mount dimmers (T1, T4, T5, T8)	1	9	12%	95%	<1s
Lutron	Ariadni / Toggler	C·L wall-mount dimmers (T1, T4, T5, T8)	1	9	12%	95%	<1s
Lutron	Lumea	C·L wall-mount dimmers (T1, T4, T5, T8)	1	9	12%	95%	<1s
Lutron	Maestro	MACL-153M	1	9	11%	95%	<1s
Lutron	RadioRA 2	RRD-10ND	1	9	20%	97%	>1s
Lutron	Maestro Wireless	MRF2-6ND	1	8	20%	97%	>1s
Lutron	HomeWorks QS	HQRD-6ND	1	8	20%	97%	>1s
Lutron	HomeWorks QS	HQRD-10ND	1	9	20%	97%	>1s
Lutron	RadioRA 2	RRD-6NA	1	9	20%	95%	>1s
Lutron	HomeWorks QS	HQRD-6NA	1	9	20%	95%	>1s
Lutron	Maestro Wireless	MRF2-6ELV	1	9	20%	95%	>1s
Lutron	HomeWorks	HxD-6ND	1	5	15%	91%	<1s
Lutron	Stanza	SZ-6ND	1	5	15%	91%	<1s
Lutron		PHPM-PA with Grafik Eye QS Main Unit	1	78	11%	96%	<1s
Lutron		PHPM-WBX with 3-wire fluorescent control	1	78	11%	96%	<1s
Lutron	Panel Module	HW/LP-RPM-4A-120	1	64	16%	97%	<1s
Lutron	Panel Module	HW/LP-RPM-4U-120	1	23	17%	96%	<1s
Lutron	Grafik QS/Wallbox Power Module	"Grafik Eye QS Main Unit Family/ LQRJ-WPM-6P"	1	23	9%	97%	<1s
Lutron	Maestro Sensor	MSCL-OP153M(T2)	1	9	11%	95%	<1s
Lutron	Maestro Sensor	MSCL-VP153M(T2)	1	9	11%	95%	<1s
Lutron	Grafik Eye 3000/ HomeWorks	Grafik Eye 3000 Family/HWI-WPM-6D-120	1	23	9%	97%	<1s
Lutron	Caseta Wireless	PD-6WCL (SD11)	1	9	11%	93%	<1s
Lutron	RadioRA 2	RRD-6CL (R3)	1	9	11%	93%	<1s
Lutron	Maestro Wireless	MRF2-6CL (M6)	1	9	11%	93%	<1s
Lutron	HomeWorks QS	HQRD-6CL (H2)	1	9	11%	93%	<1s
Lutron	HomeWorks QS	HQRA-6CL (H2)	1	9	11%	93%	<1s
Lutron	RadioRA 2	RRD-H6BRL (with neutral)	1	6	10%	95%	>1s
Lutron	HomeWorks QS	HQRD-H6BRL (with neutral)	1	6	10%	95%	>1s
Lutron	Diva	250W C·L dimmers (T5, T8)	1	14	12%	95%	<1s
Lutron	Ariadni	250W C·L dimmers (T5, T8)	1	14	12%	95%	<1s
Lutron	Nova T	NTCL-250 (T8)	1	14	12%	95%	<1s
Lutron	Grafik T	GT-150 (T6) (without neutral)	1	8	17%	92%	>1s
Lutron	Grafik T	GTJ-150 (M6) (without neutral)	1	8	17%	92%	>1s
Lutron	HomeWorks QS/myRoom	LQSE-4A1-D	1	6	11%	97%	<1s
Lutron	HomeWorks QS/myRoom	MQSE-4A1-D	1	6	11%	97%	<1s
Lutron	HomeWorks QS/myRoom	MQSE-3A1	1	6	11%	97%	<1s
Lutron	HomeWorks QS/myRoom	MQSE-2A1-D	1	6	11%	97%	<1s
Lutron	Grafik T	GT-5NEM	1	15	14%	95%	<1s
Lutron	Grafik T	GTJ-5NEM	1	15	14%	95%	<1s
Lutron	Skylark Contour Slide to Off	CTCL-150	1	9	12%	97%	<1s
Lutron	Caseta Wireless Phase Selectable	PD-5NE	1	15	8%	95%	<1s
Lutron	Vive	MRF2S-6ND	1	8	20%	97%	>1s
Lutron	Vive	MRF2S-6ELV	1	9	20%	95%	>1s
Lutron	Vive	MRF2S-6CL	1	9	11%	93%	<1s
Lutron	Maestro	MACL-LQF	1	4	11%	93%	<1s

Incandescent and Electronic Low Voltage Rated Dimmers - For Reference Only

Testing conducted by Cooper Lighting Solutions is not a substitute for and does not imply certification by an independent laboratory or any other standards certification. Refer to manufacturer specifications for more detailed information on product certifications and standards. Refer to this dimming guide notes section. Consult the dimmer manufacturer prior to installation to ensure compatibility.

Dimmer Make	Dimmer Series	Dimmer Model #	Minimum Luminaires (per circuit)	Maximum Recommended Luminaires (per circuit)	Min Dimming percentage (%)	Max Dimming percentage (%)	Low End Start-up time
Leviton	Decora	6673	1	31	16%	95%	<1s
Leviton	SureSlide	6674	1	7	4%	96%	>1s
Leviton	SureSlide	6631-2	1	31	1%	97%	<1s
Leviton	Illumatech	IPL06	1	31	5%	95%	<1s
Leviton	Illumatech	IPI06	1	31	3%	97%	>1s
Leviton	Vizia	VP106	1	31	2%	96%	<1s
Leviton	Decora	6161	1	26	14%	96%	<1s
Leviton	SureSlide	6633-P	1	31	0%	99%	NA[1]
Lutron	Toggler	TG-600P	1	31	3%	98%	<1s
Lutron	Nova T	NTFTU-6A	1	11	17%	97%	<1s
Lutron	Diva	DV600P	1	31	0%	96%	NA[1]
Lutron	Toggler	TGCL-153P	1	7	5%	94%	<1s
Lutron	Lumea	LG600P	1	31	0%	95%	NA[1]
Lutron	Skylark	S600P	1	31	0%	95%	NA[1]
Lutron	Skylark Contour	CT103P	1	53	0%	96%	NA[1]
Lutron	Skylark	SCL-153P-WH	1	7	5%	94%	<1s
Lutron	Diva	DV603P	1	31	0%	95%	NA[1]
Lutron	Diva	DVCL-153P	1	7	5%	94%	<1s
Lutron	Maestro	MACL-153-M	1	7	4%	87%	<1s
Leviton	Vizia	VPE06	1	31	2%	99%	<1s
Leviton	Illumatech	IPE04	1	15	2%	99%	<1s
Leviton	Vizia	VZE04	1	21	3%	98%	<1s
Lutron	Faedra	FAELV500	1	26	5%	96%	<1s
Lutron	Diva	DVELV303P	1	15	1%	90%	>1s
Lutron	Skylark	SELV300P	1	15	0%	98%	NA[1]
Lightolier	Sunrise	ZP260QEW	1	13	5%	96%	<1s
Eaton	Aspire	9530AW	1	31	4%	98%	<1s
Eaton	Skye	SF8AP	1	51	20%	98%	<1s
Eaton	Devine	DE06P	1	31	4%	87%	>1s
Eaton	React	RI061	1	31	0%	97%	NA[1]
Eaton	Devine	TAL06P	1	15	5%	98%	<1s
Eaton	Toggle	DAL06P	1	15	5%	98%	<1s
Eaton	Skye	SAL06P	1	15	5%	99%	<1s
Eaton	Skye	SLC03P	1	15	5%	97%	<1s
Eaton	Devine	DLC03P	1	15	5%	97%	<1s
Eaton	Toggle	TI061	1	31	4%	85%	<1s
Lutron	LCP128	LP-RPM-4U-120	1	23	1%	97%	<1s
Lutron	LCP128	LP-RPM-4A-120	1	31	1%	95%	<1s
Lutron	Ariadni	AY-600P	1	31	3%	97%	<1s
Lutron	Contour	CT-103P	1	53	0%	93%	NA[1]
Lutron	Contour	CT-600P	1	31	0%	94%	NA[1]
Lutron	Rotary	D-600P	1	31	0%	94%	NA[1]
Lutron	Diva	DV-600P	1	31	0%	95%	NA[1]
Lutron	Glyder	GL-600P	1	31	0%	95%	NA[1]
Lutron	Lumia	LG-600PH	1	31	0%	94%	NA[1]
Lutron	Nova	N-600	1	31	0%	97%	NA[1]
Lutron	Skylark	S-600P	1	31	0%	95%	NA[1]
Lutron	Centurion	C-600P	1	31	0%	95%	NA[1]
Lutron	Ariadni	AYLV-600P	1	23	0%	95%	NA[1]

Incandescent and Electronic Low Voltage Rated Dimmers - For Reference Only (continued)

Dimmer Make	Dimmer Series	Dimmer Model #	Minimum Luminaires (per circuit)	Maximum Recommended Luminaires (per circuit)	Min Dimming percentage (%)	Max Dimming percentage (%)	Low End Start-up time
Lutron	Glyder	GLV-600	1	23	0%	95%	NA[1]
Lutron	Diva	DVLV-600P	1	23	0%	94%	NA[1]
Lutron	Lumina	LG-103P	1	53	0%	95%	NA[1]
Lutron	Skylark	SLV-600P	1	23	0%	95%	NA[1]
Lutron	Nova	NTLV-600	1	23	5%	97%	<1s
Lutron	Nova	NT-600	1	31	0%	97%	NA[1]

1. Dim to Off.

Dimmer Notes:

1) Start time is measured at the lowest dimmer setting.

2) Some LED dimmers have a "rapid start" design used to provide a momentary power boost to LED and CFL lamps during start-up. When a LED luminaire is on a dimmer with "rapid start" the boost may cause a momentary flash of the LED lighting. This "flash" is generated by the dimmer, and may be more noticeable when the dimmer is at a low setting. A solution is available with Eaton dimmers which provide adjustment capability of the "rapid start": Devine (DAL06P), Accell (AAL06P), and Trace (TAL06P). Refer to product specifications online at www.eaton.com/lighting for more details.

Dimming Guide Disclaimer:

1) Leviton® is a registered trademark of Leviton Manufacturing Co. Inc.; Lutron® is a registered trademark of Lutron Electronics Co. Inc.; Lightolier® is a registered trademark of Philips Lighting; Hubbell® is a registered trademark of Hubbell Incorporated; Legrand® and Pass & Seymour® are registered trademarks of Legrand®; Eaton® is a registered trademark of Eaton Corporation. These companies and their tradenames, trademarks or brands, where noted, are associated with their respective company and are not associated with Cooper Lighting Solutions.

2) Testing conducted by Cooper Lighting Solutions is not a substitute for and does not imply certification by an independent laboratory or any other standards certification. Refer to the manufacturer specifications for more detailed information on product certifications and standards.

3) This is a representative list of typical dimmers as tested by Cooper Lighting Solutions for performance with the designated LED luminaires only. Test data contained in this literature is based upon dimmers obtained in the marketplace. Information about these other manufacturers products is obtained from packaging and published information made available by the manufacturer and is deemed to be reliable, but has not been verified. Dimmer performance and perceived limitations of the dimmers are based on factors outside of Cooper Lighting Solutions' control. The specifications of these dimming controls and their conditions of use may change without notice to Cooper Lighting Solutions or any other user. Cooper Lighting Solutions makes no specific recommendation on product selection and there are no warranties of performance or compatibility implied. Installer must ensure proper local and national electrical codes are followed; and that the dimmer application and condition of use is per dimmer manufacturer instructions and guidelines.

Application Note

H277, H347 and H347200 step-down transformers are qualified to drive multiple Halo LED on a single circuit in Non-IC construction. Installation of these transformers with individual LED fixtures on circuits with multiple LED loads is not recommended. This is not recommended due to resulting multiple inductive currents pulled by each transformer; in this situation the majority of the power would then be reactive (VARS) and not real (WATTS). If H277, H347 or H347200 transformers should be used individually on each LED fixture in a single circuit, then that circuit should be sized for lowered power factor as well as increased apparent power on the circuit. H277, H347 and H347200 are UL/cUL listed for use with Halo recessed housings: H750T, H750TCP, H7T, H7TNB, H7RT.

Step Down Transformers

H277 = Steps 277 line voltage down to 120 volts. Attaches to knockout on first fixture's junction box in a circuit and is 300VA rated. H277 is a UL recognized Component listed under the luminaire UL/cUL listing for Halo Non-IC housings.

H347 and H347200 = Steps 347 line voltage down to 120 volts. Attaches to knockout on first fixture's junction box in a circuit. H347 is 75VA and H347200 is 200VA rated. H347 is a CSA/UL Listed Component for use under the luminaire UL/cUL listing with Halo Non-IC housings.

Transformer Load - H277 (300VA)

1. H277 Transformer at full loading consumes a maximum of 16W of power.
2. When a dimmer or switch is on the secondary (120V) side of the transformer, power is consumed by the transformer when the dimmer or switch is in "OFF" mode at 6.5W and in "ON" mode at 16W maximum under full loading.
3. When a switch is on the primary (277V) side ahead of the transformer, power is consumed only in "ON" mode to a maximum of 16W under full loading. (Use of a dimmer ahead of the transformer is not recommended)

Transformer Load - H347 (75VA)

1. H347 Transformer at full loading consumes a maximum of 15W of power.
2. When a dimmer or switch is on the secondary (120V) side of the transformer, power is consumed by the transformer when the dimmer or switch is in "OFF" mode at 2.5W and in "ON" mode at 15W maximum under full loading.
3. When a switch is on the primary (347V) side ahead of the transformer, power is consumed only in "ON" mode to a maximum of 15W under full loading. (Use of a dimmer ahead of the transformer is not recommended)

Transformer Load - H347200 (200VA)

1. H347200 Transformer at full loading on 120V side consumes a maximum of 28W of power.
2. When a dimmer or switch is on the secondary (120V) side of the transformer, power is consumed by the transformer when the dimmer or switch is in "OFF" mode at 9.2W and in "ON" mode at 28W maximum under full loading.
3. When a switch is on the primary (347V) side ahead of the transformer, power is consumed only in "ON" mode to a maximum of 28W under full loading. When a switch is on the primary (277V) side ahead of the transformer, power is consumed only in "ON" mode to a maximum of 12W under full loading. (Use of a dimmer ahead of the transformer is not recommended)

SMD - Surface LED Downlight Series

SMD Maximum Units on Step Down Transformer Powered Circuits

	VA Rating	SMD4, SMD6 - 80 CRI SMD4 - 90 CRI Max # of Fixtures	SMD6 - 90 CRI Max # of Fixtures
H277	300	18	16
H347	75	4	4
H347200	200	12	10

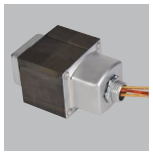

H277
277V Step Down Transformer, 300VA

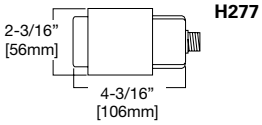



H347
347V Step Down Transformer, 75VA

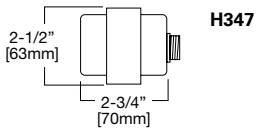



H347200
347V Step Down Transformer, 200VA

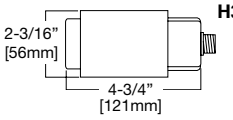

Transformer with Dimmer/Switch on 120V Secondary

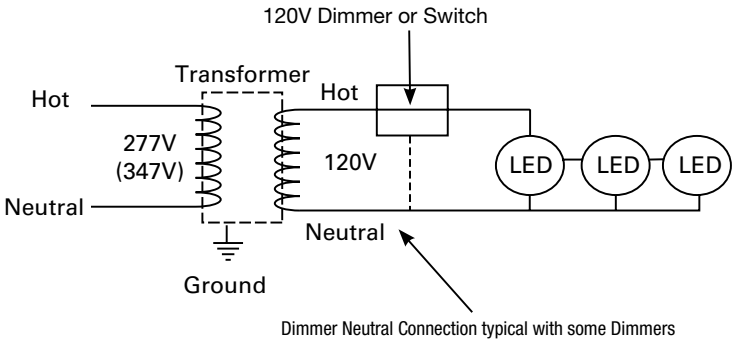

Transformer with Switch on 277V Primary

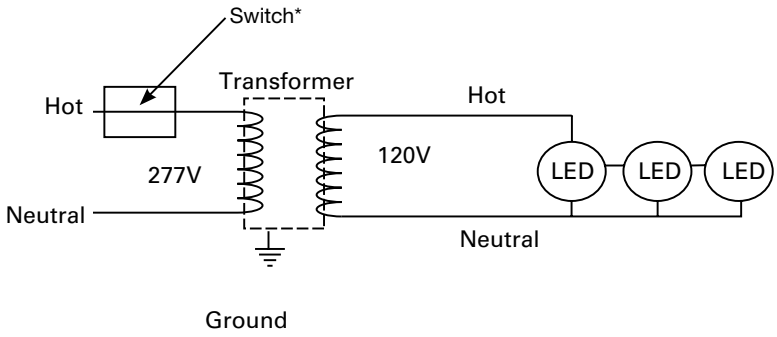

*Use of a dimmer ahead of the transformer is not recommended

Transformer with Switch on 347V Primary

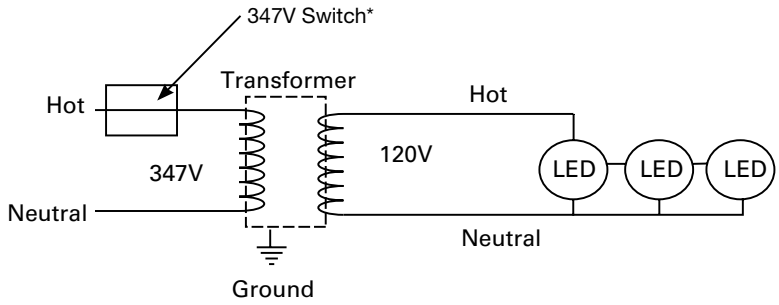

*Use of a dimmer ahead of the transformer is not recommended

Cooper Lighting Solutions
1121 Highway 74 South
Peachtree City, GA 30269
P: 770-486-4800
www.cooperlighting.com

© 2020 Cooper Lighting Solutions
All Rights Reserved.

Specifications and dimensions
subject to change without notice.