Project		Catalog #		Type	
Prepared by		Notes		Date	



HALO Commercial

HCM1 | HCM2 | HCM3 | HCM4

Multi-Head 1, 2, 3, or 4 light adjustable heads in recessed enclosure for directional accent, signage, wall wash, task, and ambient lighting

Typical Applications

Healthcare • Hospitality • Retail • Institutional • Indoor Display & Signage

Interactive Menu

- Order Information page 2
- Product Specifications page 4
- Energy & Performance Data page 5
- Photometric Data page 6
- Connected Systems page 9
- Product Warranty

Product Certification

ENERGY STAR · Efficiency Standards T24 California Title 24 Residential and Non-Residential Compliant · FC · RoHS COMPLIANT · c UL us LISTED

Product Features

damp location · CERTIFIED PLENUM RATED · WaveLinx

Top Product Features

- 1, 2, 3, or 4 adjustable multi-head recessed luminaire, with 2700K, 3000K, 3500K, 4000K CCT options, in 90CRI
- Multi-heads feature nominal >1200 lumens per head, 0-70° tilt from nadir, 355°rotation, interchangeable optics SP, NFL, FL (NFL included)
- Flanged trim standard, accessory rimless mud-in field installation kit option for new construction
- Matte White and Matte Black finish options for Housing, Multi-heads, Cover plate and Flange; in new construction or remodeler housings
- UNV 120V-277V with 1%-100% dimming on 0-10V controls at 277V; 1%-100% dimming on LE/TE phase control dimmers at 120V

Dimensional and Mounting Details

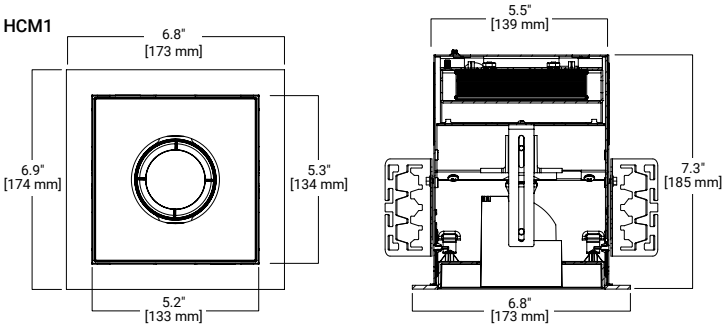

additional product diagrams

Directional Aiming

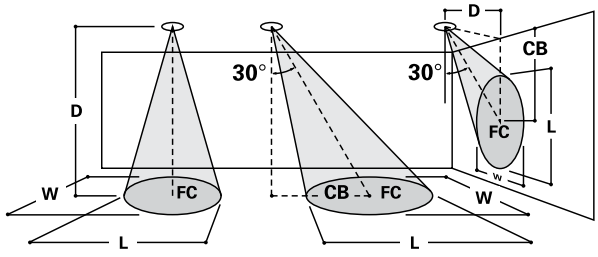

Note: 0-70° tilt from nadir, 30° illustrated.

D = Distance in feet to floor or wall.
FC = Footcandles on floor or wall at center beam aiming location.
L = Effective Visual Beam length in feet (50% of maximum footcandle level.)
W = Effective Visual Beam width in feet (50% of maximum footcandle level.)
CB = Distance in feet across or down to center beam location.

View Photometry

Order Information

SAMPLE ORDER NUMBER: **HCM4935ED010MW**

Additional options and accessories are purchased separately.

New Construction Housing | CRI/CCT | Input / Control | Finish | Factory Emergency Options | Factory Connected Options

New Construction Housing[6]	CRI/CCT	Input / Control	Finish	Factory Emergency Options	Factory Connected Options
HCM1 = 1-head adjustable multiple, in new construction housing **HCM2** = 2-head adjustable multiple, in new construction housing **HCM3** = 3-head adjustable multiple, in new construction housing **HCM4** = 4-head adjustable multiple, in new construction housing **HCM1CP** = 1-head adjustable multiple, new construction housing, CCEA Chicago Plenum **HCM2CP** = 2-head adjustable multiple, new construction housing, CCEA Chicago Plenum **HCM3CP** = 3-head adjustable multiple, new construction housing, CCEA Chicago Plenum **HCM4CP** = 4-head adjustable multiple, new construction housing, CCEA Chicago Plenum	**927** = 90 CRI (minimum), 2700K CCT **930** = 90 CRI (minimum), 3000K CCT **935** = 90 CRI (minimum), 3500K CCT **940** = 90 CRI (minimum), 4000K CCT	**ED010** = UNV 120V-277V, 50/60Hz; 1%-100% dimming with 0-10V dimming controls at 120V-277V; 1%-100% dimming with leading or trailing edge phase cut dimmers at 120V only **D010347** = 347VAC 50/60Hz; 1%-100% dimming with 0-10V dimming controls at 347V (Canada only) [1] **DLV** = Distributed low voltage dimming (1%-100%) driver. For use with Cooper Lighting Solutions' DLVP system only. Refer to DLVP low-voltage power module and DLVP specifications for details. [1]	**MW** = Matte White housing & multi-heads / Matte White flange trim **MB** = Matte Black housing & multi-heads / Matte Black flange trim **MBWF** = Matte Black housing & multi-heads / Matte White flange trim	**REM7** = 7 watt emergency module with remote test / indicator light, use with ED010 only [1][2] **REM14** = 14 watt emergency module with remote test / indicator light, use with ED010 [1][2] **IEM7** = integral 7 watt emergency module with integral test / indicator light, use with ED010 only [1][2] **IEM14** = integral 14 watt emergency module with integral test / indicator light, use with ED010 only [1][2] **BOD7ST** = 7.5 watt Bodine self-test diagnostic emergency module with remote test / indicator light, use with ED010 only [1]	**WTA** = Factory installed WaveLinx Sensor Kit [1][2][4] **WTK** = Factory installed WaveLinx Lite Sensor Kit [1] [5]
Notes (6) HCM25NFL 25° Narrow Flood optic preinstalled	**Notes**	**Notes** (1) Not available with CP models	**Notes**	**Notes** (1) Not available with CP models (2) Not available with D010347 (347V models)	**Notes** (1) Not available with CP models (2) Not available with D010347 (347V models) (4) WTA = WaveLinx tile mount sensor kit for daylight dimming, PIR motion sensing, and optional RLTS - Real Time Location Services, use with D010 only (Refer to WaveLinx system specifications) (5) WTK = WaveLinx Lite tile mount sensor kit for daylight dimming, PIR motion sensing, use with D010 only (Refer to WaveLinx Lite system specifications)

Accessories

Accessories

RMB22 = Adjustable wood joist mounting bars, pair, extend to 22" **HB26** = C-Channel bar hanger, 26" long, pair **HB50** = C-Channel bar hanger, 50" long, pair **Optics** **HCM15SP** = 15° Spot beam optic **HCM25NFL** = 25° Narrow Flood beam optic - replacement part for NFL optic included **HCM40FL** = 40° Flood beam optic **Flange Kits** **HCM1FLMW** = 1-light multiple, flange kit, matte white - replacement part for flange included **HCM2FLMW** = 2-light multiple, flange kit, matte white - replacement part for flange included **HCM3FLMW** = 3-light multiple, flange kit, matte white - replacement part for flange included **HCM4FLMW** = 4-light multiple, flange kit, matte white - replacement part for flange included **HCM1FLMB** = 1-light multiple, flange kit, matte black - replacement part for flange included **HCM2FLMB** = 2-light multiple, flange kit, matte black - replacement part for flange included **HCM3FLMB** = 3-light multiple, flange kit, matte black - replacement part for flange included **HCM4FLMB** = 4-light multiple, flange kit, matte black - replacement part for flange included **Coverplates** **HCMCVPLMW** = Coverplate, matte white - replacement part for plate included **HCMCVPLMB** = Coverplate, matte black - replacement part for plate included **Mud Ring Kits** **1MRK** = 1-light multiple, flangeless mud ring field installation kit (new construction only) **2MRK** = 2-light multiple, flangeless mud ring field installation kit (new construction only) **3MRK** = 3-light multiple, flangeless mud ring field installation kit (new construction only) **4MRK** = 4-light multiple, flangeless mud ring field installation kit (new construction only)	**Optical Lenses** [3] **L110N** = Diffuse Sand Blasted Lens **L111** = Soft Focus Lens **L113** = Prismatic Spread Lens **L115** = Linear Spread Lens **L100MB** = Expanded metal louver **2" 50mm UV and Color Filters** [3] **L112** = Red Gel Filter **L114** = Ultraviolet, Dichoric Filter **L120** = Red, Dichoric Filter **L121** = Amber, Dichoric Filter **L122** = Yellow, Dichoric Filter **L123** = Green, Dichoric Filter **L124** = Daylight Blue, Dichoric Filter **L125** = Blue, Dichoric Filter **L127** = Cosmetic (2700K), Dichoric Filter **L131** = Amber, Gel Filter	**Connected Lighting** **WTA** = Field installed WaveLinx Sensor Kit [1] [4] **WTK** = Field installed WaveLinx Lite Sensor Kit [1] [5]
Notes	**Notes** (3) 2-inch nominal dia. [50mm]; maximum (2) lens/color media per multi-head	**Notes** (1) Not available for Chicago Plenum (4) WTA = WaveLinx tile mount sensor kit for daylight dimming, PIR motion sensing, and optional RLTS - Real Time Location Services, use with D010 only (Refer to WaveLinx system specifications) (5) WTK = WaveLinx Lite tile mount sensor kit for daylight dimming, PIR motion sensing, use with D010 only (Refer to WaveLinx Lite system specifications)

Order Information

SAMPLE ORDER NUMBER: **HCMR4935ED010MW**

Additional options and accessories are purchased separately.

Remodel Housing	CRI/CCT	Input / Control	Finish	Accessories
HCMR1 = 1-head adjustable multiple, remodeler - install from below finished ceiling w/ integral speed clamp ceiling retention **HCMR2** = 2-head multiple, remodeler - install from below finished ceiling w/ integral speed clamp ceiling retention **HCMR3** = 3-head multiple, remodeler - install from below finished ceiling w/ integral speed clamp ceiling retention **HCMR4** = 4-head multiple, remodeler - install from below finished ceiling w/ integral speed clamp ceiling retention	**927** = 90 CRI (minimum), 2700K CCT **930** = 90 CRI (minimum), 3000K CCT **935** = 90 CRI (minimum), 3500K CCT **940** = 90 CRI (minimum), 4000K CCT	**ED010** = UNV 120V-277V, 50/60Hz; 1%-100% dimming with 0-10V dimming controls at 120V-277V; 1%-100% dimming with leading or trailing edge phase cut dimmers at 120V only **D010347** = 347VAC 50/60Hz; 1%-100% dimming with 0-10V dimming controls at 347V (Canada only) (1)	**MW** = Matte White housing & multi-heads / Matte White flange trim **MB** = Matte Black housing & multi-heads / Matte Black flange trim **MBWF** = Matte Black housing & multi-heads / Matte White flange trim	**Optics** **HCM15SP** = 15° Spot beam optic **HCM25NFL** = 25° Narrow Flood beam optic - replacement part for NFL optic included **HCM40FL** = 40° Flood beam optic **Coverplates** **HCMCVPLMW** = Coverplate, matte white - replacement part for plate included **HCMCVPLMB** = Coverplate, matte black - replacement part for plate included **Optical Lenses** (2) **L110N** = Diffuse Sand Blasted Lens **L111** = Soft Focus Lens **L113** = Prismatic Spread Lens **L115** = Linear Spread Lens **L100MB** = Expanded metal louver **2" 50mm UV and Color Filters** (2) **L112** = Red Gel Filter **L114** = Ultraviolet, Dichroic Filter **L120** = Red, Dichroic Filter **L121** = Amber, Dichroic Filter **L122** = Yellow, Dichroic Filter **L123** = Green, Dichroic Filter **L124** = Daylight Blue, Dichroic Filter **L125** = Blue, Dichroic Filter **L127** = Cosmetic (2700K), Dichroic Filter **L131** = Amber, Gel Filter
Notes (6) HCM25NFL 25° Narrow Flood optic preinstalled	**Notes**	**Notes** (1) Not available with CP models	**Notes**	**Notes** (2) 2-inch nominal dia. [50mm]; maximum (2) lens/color media per multi-head

L100 Series
2" 50mm UV and Color Filters

Make a powerful lighting statement by injecting soft or intense hues to accent any space.

L112=Red Gel Filter
L114=Ultraviolet, Dichroic Filter
L120=Red, Dichroic Filter
L121=Amber, Dichroic Filter
L122=Yellow, Dichroic Filter
L123=Green, Dichroic Filter
L124=Daylight Blue, Dichroic Filter
L125=Blue, Dichroic Filter
L127=Cosmetic (2700K), Dichroic Filter
L131=Amber, Gel Filter

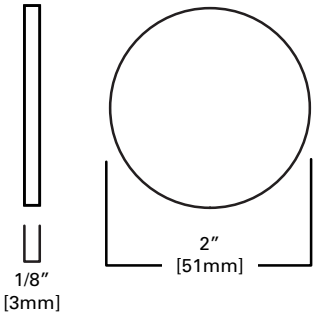



L100 Series UV and Color Filters

L100 Series
Optical Lenses

L110N=Diffuse Sandblasted Lens
Provides an even beam spread - especially useful in wall washing.

L111=Soft Focus Lens
Smooths irregular beam pattern while maintaining high controlled illumination levels and beam angles.

L113=Prismatic Spread Lens
Provides a symmetrical broadening of beams. Suitable when a wide, uniform light distribution is required.

L115=Linear Spread Lens
Fans out the beam 55° (27-1/2° to each side) to produce a wide rectangular pattern.

L100MB=Expanded metal louvre
Miniature black finished hexagonal-cell louvre - controls light spill while retaining lamp optics.

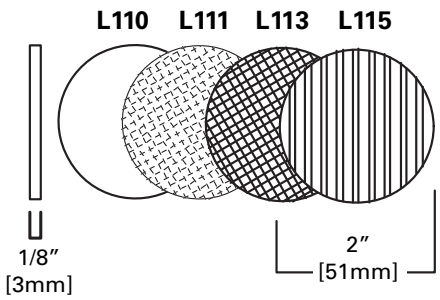

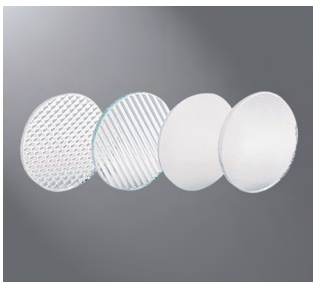

L100 Series Optical Lenses

Product Specifications

Housings
- New construction and remodel housings
- Housings are die-formed steel in matte white or matte black.
- Flange trim comes standard in matte white or matte black.
- Flange trim is removable in new construction housings for tile T-grid and above ceiling installations. Optional rimless mud-in kit may be ordered as an accessory for field installation in new construction ceilings to create a clean trimless look.
- Remodeler flange trim is permanently attached to housing on remodel housings for secure fit to ceiling

Housing Mounting
- New construction housing universal mounting bracket accepts 1/2" EMT, C-channel and bar hangers (mounting channel/bars sold separately). Universal bracket adjusts vertically for ceiling thickness 1/2" to 2-1/2". Optional wood hanger bar kit available for field installation with wood framing
- Remodel housing speed clamps adjust to accommodate 3/8" to 2" thick ceilings. Combination hex, slot and Philips drive screws actuate clamps and speed installation. Clamps are accessible from below the ceiling. Remodel housing is designed for installation from below the finished ceiling only

Multi-heads
- Pull-down telescoping action allows adjustable 0-70° tilt and 355° rotation (70° tilt from nadir)
- Multi-heads designed for up to (2) industry standard 2-inch diameter [50mm] color or lens media
- Multi-heads finish matches the housing as matte white or matte black
- Nominal >1200 lumens per multi-head
- Multi-heads in each housing (1-2-3-4 heads) switch or dim from one control input (no individual head control)
- Inset polymer cover plates shield multi-head pull-down mechanism, and allow tool-less access to inner housing

Multi-head Optics
- Three interchangeable beam forming reflectors: 25° Narrow Flood, 15° Spot and 40° Flood
- 25° Narrow Flood optic included in each multi-head (available separately as replacement part)
- 15° Spot and 40° Flood optics may be ordered separately for tool-less field installation
- Reflector optics of vacuum metalized polymer
- All optics are available to order separately for field installation

Multi-head Media Holder
- Integral media holder provides tool-less access to reflector optics and lens media
- Media holder accepts up to (2) 2-inch [50mm] diameter 3.0mm thick color filters or lens
- Order color filters and lens media separately

LED
- Chip on board LED is integral to each multi-head
- Proximity phosphors over chip on board LEDs provide a uniform source with high efficiency and no pixilation
- 90 CRI minimum, R9>50
- Color accuracy within 3 SDCM provides color uniformity
- Correlated color temperature options
  - 2700K
  - 3000K
  - 3500K
  - 4000K
- Passive thermal management achieves L70 at 50,000 hours

LED Driver / Dimming
- Universal 120V-277VAC, 50/60Hz driver. Continuous 1%-100% dimming on 0-10V dimmer controls at 277V, and 1%-100%dimming on leading edge/trailing edge phase control dimmers at 120V. Consult dimming guide, and dimmer manufacturer for details
- 347VAC 50/60Hz input option with 1%-100%dimming on 0-10V dimmer controls (Canada only)
- Driver output controls all multi-heads in each housing (not individual heads)
- Optional "DLV" low voltage DC driver for Cooper Lighting Solutions DLVP distributed low voltage system combines power and control

Emergency Options
- Remote and integral emergency options include charge indicator and test switch
- Provides 90 minutes of standby lighting meeting most life safety codes for egress lighting
- Remote emergency option with Self-Test (self-diagnostic), includes remote charge indicator and test switch

Connected Lighting System Options
Two WaveLinx connected systems to choose. Summary information provided below, refer to WaveLinx system specifications and application guides for details.

<u>WaveLinx Wireless System Tilemount Sensor Kit</u>
- WaveLinx Wireless WTA tile mount sensor kit offers daylight dimming, PIR motion sensing, scene and zone configuration, automatic commissioning; and optional RLTS - Real Time Location Services available.

<u>WaveLinx Lite System Tilemount Sensor Kit</u>
- WaveLinx Lite WTK tile mount sensor kit offers daylight dimming and PIR motion sensing, scene and grouping configuration.

<u>WaveLinx Tilemount Kits Application</u>
- The WTA and WTK tilemount kits include a control module mounted on the luminaire junction box via 1/2" knock-out, and a tilemount sensor on 54-inch whip; for ceiling installation by direct-mount spring clips or via mounting bracket in octagon ceiling boxes.
- The WTA and WTK tilemount kits may be ordered as factory installed on the luminaire, or ordered separately as a field installed accessory kit.

Electrical Junction box
- Integral electrical compartment in housing enclosure
- 7.25 in^3 low voltage divider for 0-10V low voltage dimming wire connections
- 23.85 (1 head), 73.85 (2 head), 124.13 (3 head), 154 (4 head) in^3 internal volume excluding 0-10V low voltage barrier
- 51.63 (1 head), 101.63 (2 head), 151.92 (3 head), 202.31 (4 head) in^3 total internal volume
- Listed for (4) #12 AWG 90° C splice conductors
- (2) 3/8" and (4) 1/2" trade size pry-outs (1 head)
  (2) 3/8" and (5) 1/2" trade size pry-outs (2 head)
  (2) 3/8" and (7) 1/2" trade size pry-outs (3 head)
  (2) 3/8" and (7) 1/2" trade size pry-outs (4 head)
- (3) 4-port push wire nuts for mains voltage, use 1-port for fixture connection

Compliance
- cULus Listed, damp location in covered ceilings
- Type IC, suitable for direct contact to air permeable insulation
- Not for use in direct contact with spray foam insulation consult NEMA LSD57-2013
- Airtight per ASTM-E283-04
- EMI/RFI emissions per FCC 47CFR Part 15 Class B at 120VAC and Class A at 277VAC.
  CAN ICES-005(B)/NMB-005(B) at 120VAC.
  CAN ICES-005(A)/NMB-005(A) at 277VAC.
- Contains no mercury or lead and RoHS compliant
- Photometric testing in accordance with IES LM-79-08
- Lumen maintenance projections in accordance with IES LM-80-08 and TM-21-11
- May be used for State of California Title 24 high efficacy LED compliance, per JA8 High Efficacy Lighting certification standards, reference CEC appliance efficiency database
- ENERGY STAR® certified, reference certified light fixtures database
- May be used to comply with State of California Title 24 non-residential code, as a dimmable LED luminaire

Warranty
- Five year limited warranty, consult website for details. www.cooperlighting.com

Energy Data

HCM1 Series 1-Multi-head	>1200 lumen / head*	
Input Voltage (VAC)	120V	277V
Input Current (A)	0.127	0.058
Input Power (W)	15.2	14.9
In-rush Current (A)	6	13.2
In-rush Duration (µs)	178	93
THDi (%)	12.3	11.3
PF (Nominal input 120-277VAC at 100% of rated output)	≥ 0.98	≥ 0.93
Minimum starting temperature -40°C (-40°F)**		
Sound Rating: Class A standards		

HCM2 Series 2-Multi-head	>1200 lumen / head*	
Input Voltage (VAC)	120V	277V
Input Current (A)	0.238	0.104
Input Power (W)	28.3	27.7
In-rush Current (A)	6.3	14.2
In-rush Duration (ms)	168	101
THDi (%)	9.9	10.2
PF (Nominal input 120-277VAC at 100% of rated output)	≥ 0.98	≥ 0.95
Minimum starting temperature -40°C (-40°F)**		
Sound Rating: Class A standards		

HCM3 Series 3-Multi-head	>1200 lumen / head*	
Input Voltage (VAC)	120V	277V
Input Current (A)	0.357	0.157
Input Power (W)	42.3	41.02
In-rush Current (A)	6.9	15
In-rush Duration (ms)	171	111
THDi (%)	10.7	9.2
PF (Nominal input 120-277VAC at 100% of rated output)	≥ 0.98	≥ 0.94
Minimum starting temperature -40°C (-40°F)**		
Sound Rating: Class A standards		

HCM4 Series 4-Multi-head	>1200 lumen / head*	
Input Voltage (VAC)	120V	277V
Input Current (A)	0.47	0.207
Input Power (W)	56.1	54.8
In-rush Current (A)	12.1	25.1
In-rush Duration (ms)	212	69
THDi (%)	10.5	8.9
PF (Nominal input 120-277VAC at 100% of rated output)	≥ 0.988	≥ 0.95
Minimum starting temperature -40°C (-40°F)**		
Sound Rating: Class A standards		

Notes:
***** Nominal lumen value per head, field results may vary.
****** Emergency Battery packs are rated for a minimum starting temperature of 0°C.

Photometric Data

HCM-1-Head @3000K, 90 CRI, Spot (15˚)	
Filename	HCM1R15930ED010MW.ies
Test No.	P434571
Lumcat	HCM1R15930ED010MW
Lumens	1223 Lm
Watts	14.3 W
LPW	85.5 Lm/W
CCT	3000K
SC (0/90/45)	0.25 / 0.25 / 0.25
Beam Angle	15°
UGR	10

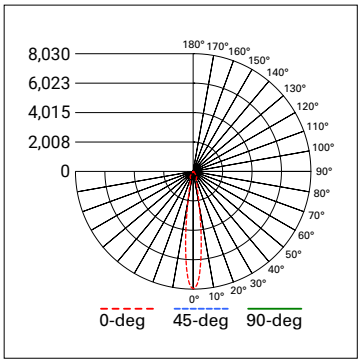

ZONAL LUMENS SUMMARY		
Zone	Lumens	% Fixture
0-30	938	76.7
0-40	1129	92.3
0-60	1192	97.4
0-90	1223	100
90-180	0	0
0-180	1223	100

LUMINANCE DATA (CD/M²)			
Angle	0º	45º	90º
45	32724	32724	32724
55	20128	20128	20128
65	17395	17395	17395
75	24400	24400	24400
85	6227	6227	6227

CANDELA TABLE	
Degrees Vertical	Candela
0	8030
5	5918
15	890
25	487
35	332
45	47
55	23
65	15
75	13
85	1
90	0

COLOR METRIC SUMMARY

TM-30-15	R_f = 93
	R_g = 99
CRI/CIE	R_a = 93.7
	R_9 = 57.5

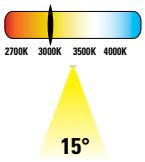

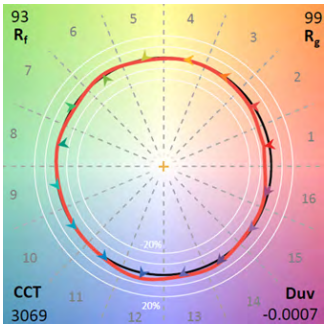

CONE OF LIGHT

0˚ AIMING ANGLE HORIZONTAL ILLUMINANCE ON FLOOR

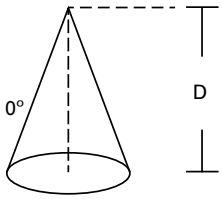

D	FC	L	W
5.5'	265.4	1.2	1.2
7'	163.9	1.6	1.6
8'	125.5	2	2
9'	99.1	2.2	2.2
10'	80.3	2.4	2.4
12'	55.8	3	3

30˚ AIMING ANGLE HORIZONTAL ILLUMINANCE ON FLOOR

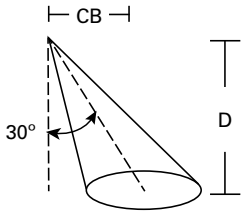

D	FC	L	W	CB
5.5'	175.5	1.8	1.6	3.2
7'	108.3	2.3	2	4
8'	82.9	2.6	2.2	4.6
9'	65.5	2.9	2.6	5.2
10'	53.1	3.2	2.8	5.8
12'	36.9	3.9	3.4	6.9

30˚ AIMING ANGLE VERTICAL ILLUMINANCE ON WALL

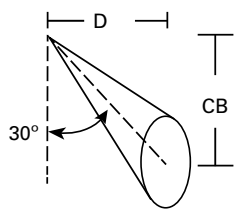

D	FC	L	W	CB
1'	1175.6	0.8	0.4	1.7
2'	293.9	1.6	0.8	3.5
3'	130.6	2.4	1.4	5.2
4'	73.5	3.3	1.8	6.9
5'	47	4.1	2.2	8.7
6'	32.7	4.9	2.8	10.4

CCT Multipliers – 90CRI

2700K	3000K	3500K	4000K
0.94	1.00	1.05	1.08

Multipliers for nominal values with other series models

D = Distance in feet to floor or wall.
FC = Footcandles on floor or wall at center beam aiming location.
L = Effective Visual Beam length in feet (50% of maximum footcandle level.)
W = Effective Visual Beam width in feet (50% of maximum footcandle level.)
CB = Distance in feet across or down to center beam location.

Photometric Data

HCM-1-Head @3000K, 90 CRI, Narrow Flood (25˚)	
Filename	HCM1R25930ED010MW.ies
Test No.	P434583
Lumcat	HCM1R25930ED010MW
Lumens	1213 Lm
Watts	14.3 W
LPW	84.9 Lm/W
CCT	3000K
SC (0/90/45)	0.39 / 0.39 / 0.39
Beam Angle	25°
UGR	10

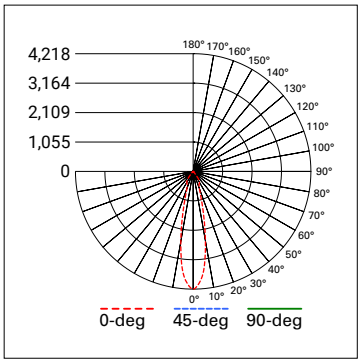

ZONAL LUMENS SUMMARY		
Zone	Lumens	% Fixture
0-30	924	76.1
0-40	1117	92.1
0-60	1180	97.2
0-90	1213	100
90-180	0	0
0-180	1213	100

LUMINANCE DATA (CD/M²)			
Angle	0º	45º	90º
45	30491	30491	30491
55	22881	22881	22881
65	18679	18679	18679
75	24400	24400	24400
85	6227	6227	6227

CANDELA TABLE	
Degrees Vertical	Candela
0	4218
5	3761
15	1283
25	504
35	337
45	44
55	27
65	16
75	13
85	1
90	0

COLOR METRIC SUMMARY

TM-30-15	R_f = 93
	R_g = 99
CRI/CIE	R_a = 93.7
	R_9 = 57.5

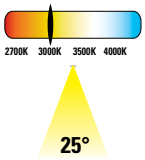

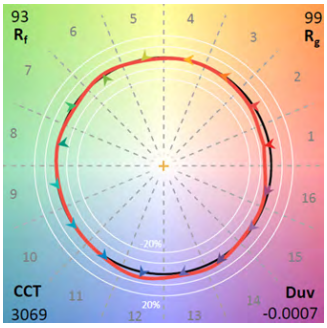

CONE OF LIGHT

0˚ AIMING ANGLE HORIZONTAL ILLUMINANCE ON FLOOR

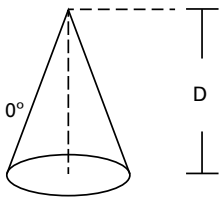

D	FC	L	W
5.5'	139.4	2	2
7'	86.1	2.6	2.6
8'	65.9	3	3
9'	52.1	3.4	3.4
10'	42.2	3.8	3.8
12'	29.3	4.6	4.6

30˚ AIMING ANGLE HORIZONTAL ILLUMINANCE ON FLOOR

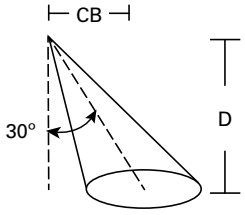

D	FC	L	W	CB
5.5'	93.8	2.6	2.4	3.2
7'	57.9	3.4	3	4
8'	44.3	3.9	3.4	4.6
9'	35	4.4	4	5.2
10'	28.4	4.9	4.4	5.8
12'	19.7	5.9	5.2	6.9

30˚ AIMING ANGLE VERTICAL ILLUMINANCE ON WALL

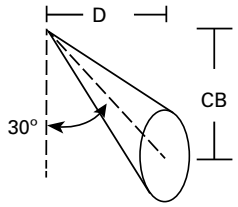

D	FC	L	W	CB
1'	730.3	0.9	0.6	1.7
2'	182.6	2	1.2	3.5
3'	81.1	3.1	1.8	5.2
4'	45.6	4.1	2.6	6.9
5'	29.2	5.2	3.2	8.7
6'	20.3	6.2	3.8	10.4

CCT Multipliers – 90CRI

2700K	3000K	3500K	4000K
0.94	1.00	1.05	1.08

Multipliers for nominal values with other series models

D = Distance in feet to floor or wall.
FC = Footcandles on floor or wall at center beam aiming location.
L = Effective Visual Beam length in feet (50% of maximum footcandle level.)
W = Effective Visual Beam width in feet (50% of maximum footcandle level.)
CB = Distance in feet across or down to center beam location.

Photometric Data

HCM-1-Head @3000K, 90 CRI, Flood (40°)	
Filename	HCM1R40930ED010MW.ies
Test No.	P434595
Lumcat	HCM1R40930ED010MW
Lumens	1193 Lm
Watts	14.3 W
LPW	83.4 Lm/W
CCT	3000K
SC (0/90/45)	0.72 / 0.72 / 0.76
Beam Angle	40°
UGR	10

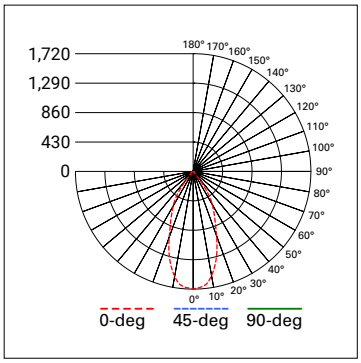

ZONAL LUMENS SUMMARY		
Zone	Lumens	% Fixture
0-30	868	72.8
0-40	1086	91
0-60	1150	96.4
0-90	1193	100
90-180	0	0
0-180	1193	100

LUMINANCE DATA (CD/M²)			
Angle	0°	45°	90°
45	30491	30491	30491
55	23827	23827	23827
65	24866	24866	24866
75	32407	32407	32407
85	6227	6227	6227

CANDELA TABLE	
Degrees Vertical	Candela
0	1720
5	1685
15	1318
25	756
35	364
45	44
55	28
65	21
75	17
85	1
90	0

COLOR METRIC SUMMARY

TM-30-15	R_f = 93
	R_g = 99
CRI/CIE	R_a = 93.7
	R_9 = 57.5

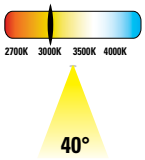

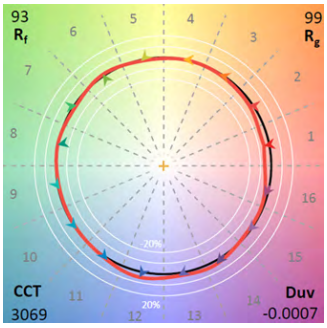

CONE OF LIGHT

0° AIMING ANGLE HORIZONTAL ILLUMINANCE ON FLOOR

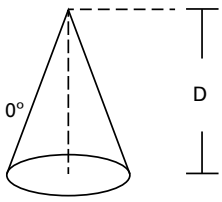

D	FC	L	W
5.5'	56.8	3.8	3.8
7'	35.1	5	5
8'	26.9	5.6	5.6
9'	21.2	6.4	6.4
10'	17.2	7	7
12'	11.9	8.6	8.6

30° AIMING ANGLE HORIZONTAL ILLUMINANCE ON FLOOR

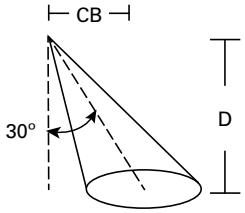

D	FC	L	W	CB
5.5'	42.8	4.4	4.2	3.2
7'	26.4	5.7	5.2	4
8'	20.2	6.5	6	4.6
9'	16	7.4	6.8	5.2
10'	13	8.3	7.6	5.8
12'	9	9.9	9	6.9

30° AIMING ANGLE VERTICAL ILLUMINANCE ON WALL

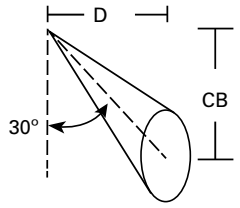

D	FC	L	W	CB
1'	470.1	1.1	0.8	1.7
2'	117.5	2.4	1.8	3.5
3'	52.2	3.5	2.8	5.2
4'	29.4	4.8	3.8	6.9
5'	18.8	6	4.8	8.7
6'	13.1	7.2	5.8	10.4

CCT Multipliers – 90CRI

2700K	3000K	3500K	4000K
0.94	1.00	1.05	1.08

Multipliers for nominal values with other series models

D = Distance in feet to floor or wall.
FC = Footcandles on floor or wall at center beam aiming location.
L = Effective Visual Beam length in feet (50% of maximum footcandle level.)
W = Effective Visual Beam width in feet (50% of maximum footcandle level.)
CB = Distance in feet across or down to center beam location.

Connected Systems



WaveLinx Lite - WTK Tilemount Sensor

- Intuitive Android™ or Apple® iOS® app for basic system code compliant set up and configuration via Bluetooth
- Up to 28 unique areas per project site (WaveLinx Lite Bluetooth network)
- Up to 50 devices for an area, any one of 16 control zones, up to 6 occupancy sets, and custom lighting scenes
- Automatic occupancy or vacancy, sensor sensitivity, daylight dimming, etc. configurable through the app
- Refer to the WaveLinx system specifications for details

Device Security · Manual Dimmer · Occupancy Sensor · Daylighting Control · Manually Switched ON/OFF · Tuning Control · Lumen Maintenance Control · Scenes

WaveLinx Lite WTK Tilemount Wiring Diagram

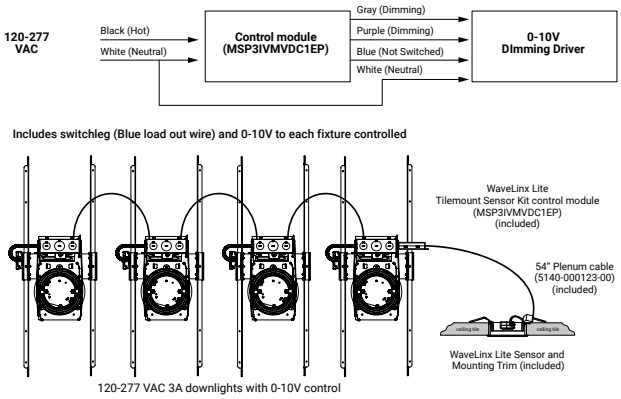

WaveLinx Lite Bluetooth Enabled System

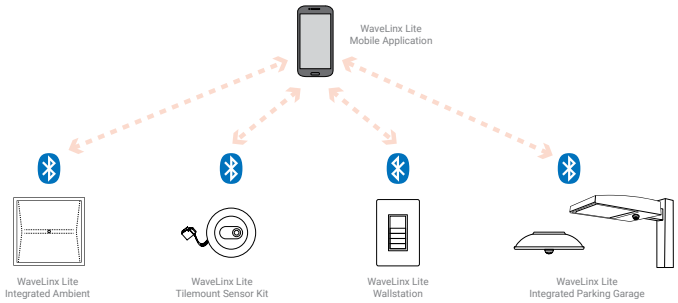

WaveLinx Wireless – WTA Tilemount Sensor



- WaveLinx Wireless functionality configures zones and customizes settings from one secure mobile app
- Automatic code commissioning that meets the strictest codes
- Fixtures and sensors integrate with Wireless Area Controller, Wall Stations, and Control Devices
- Stand-Alone Offices or Entire Building Network Installations



WaveLinx mobile app settings

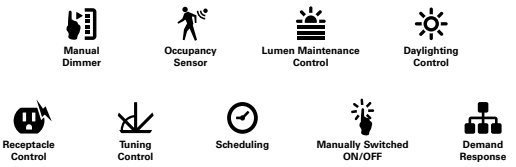

WaveLinx Lite WTA Tilemount Wiring Diagram

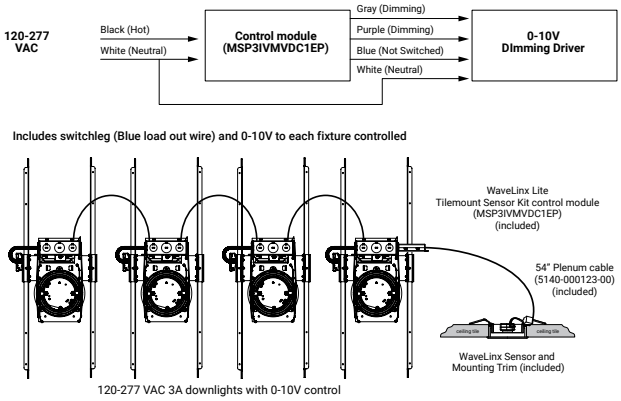

WaveLinx Wireless Trellix Building Management Integration

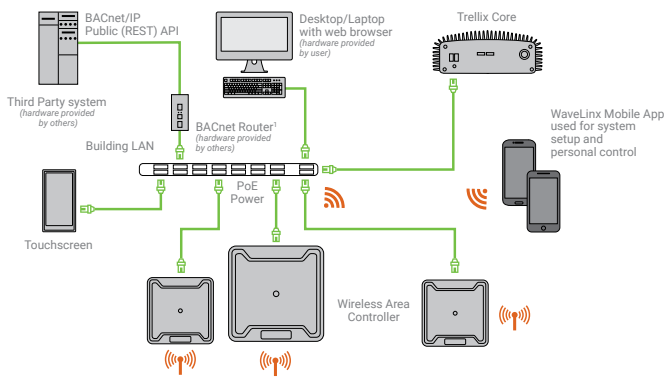

Dimensional Details

HEAD IN REGRESSED POSITION

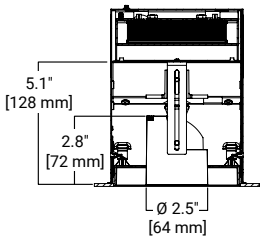

HEAD IN PULL-DOWN

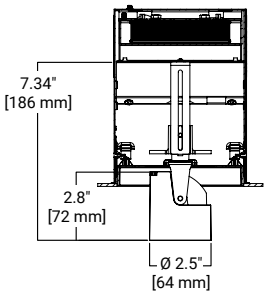

HEAD IN PULL-DOWN WITH MAX. TILT

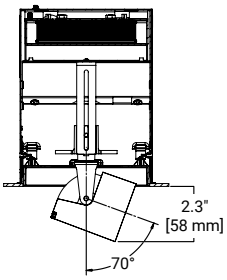

HCM1

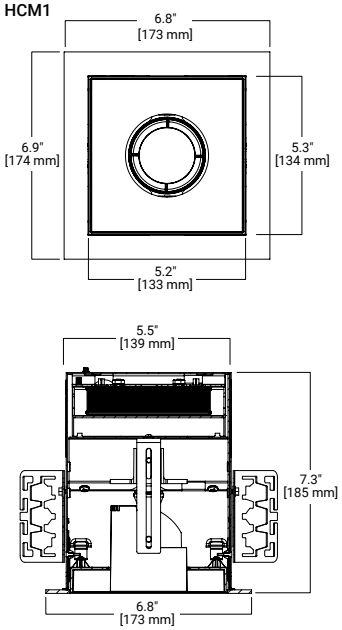

HCM2

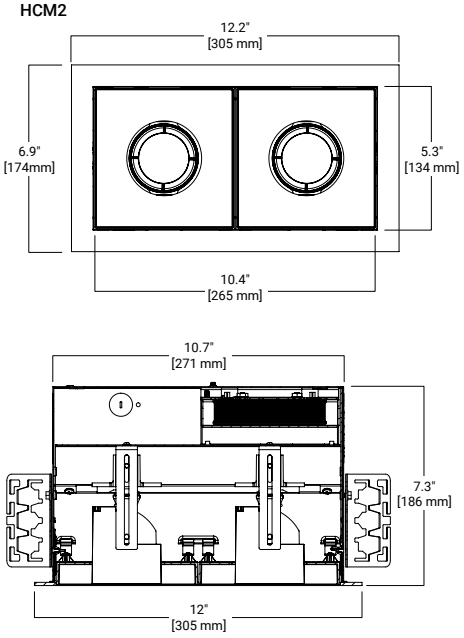

HCM3

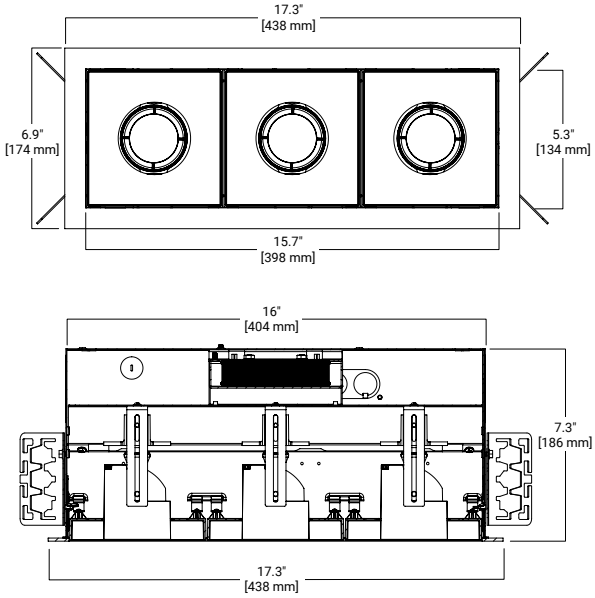

HCM4

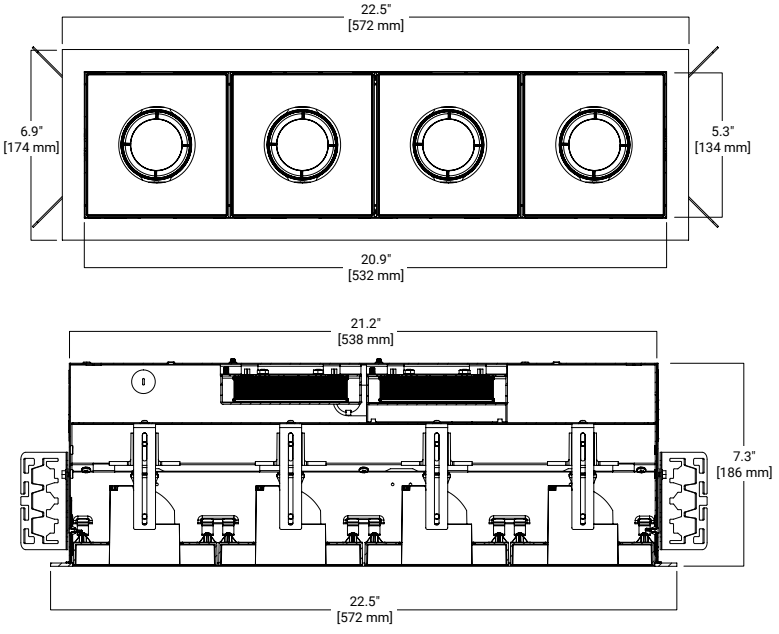

Dimensional Details

HCM1
Mud-in Trim

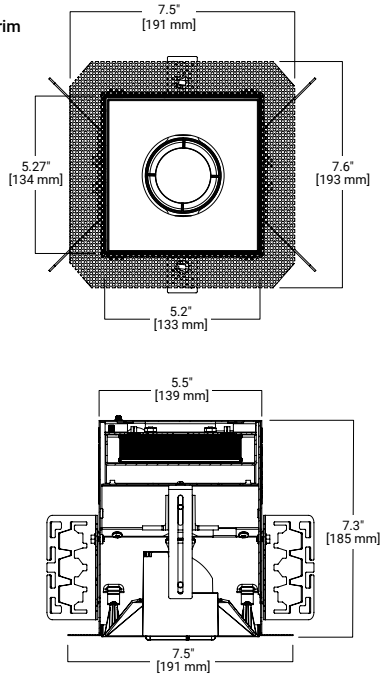

HCM2
Mud-in Trim

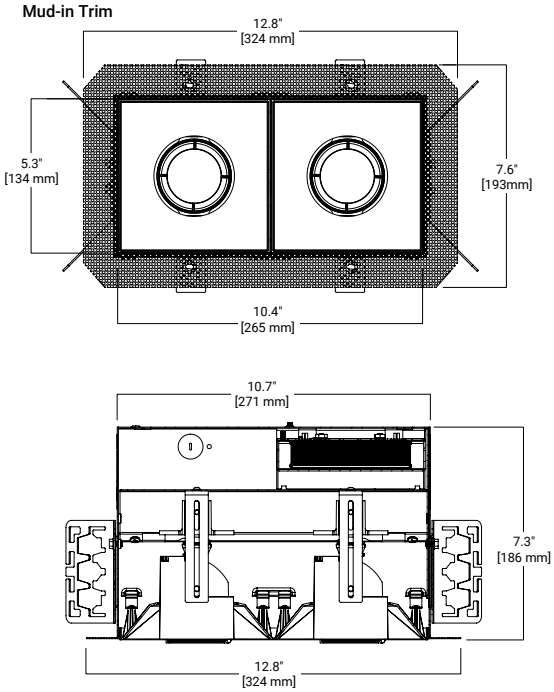

HCM3
Mud-in Trim

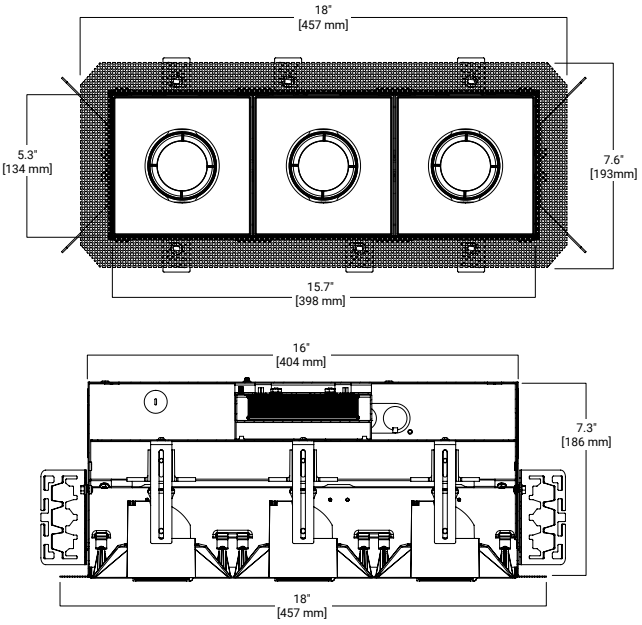

HCM4
Mud-in Trim

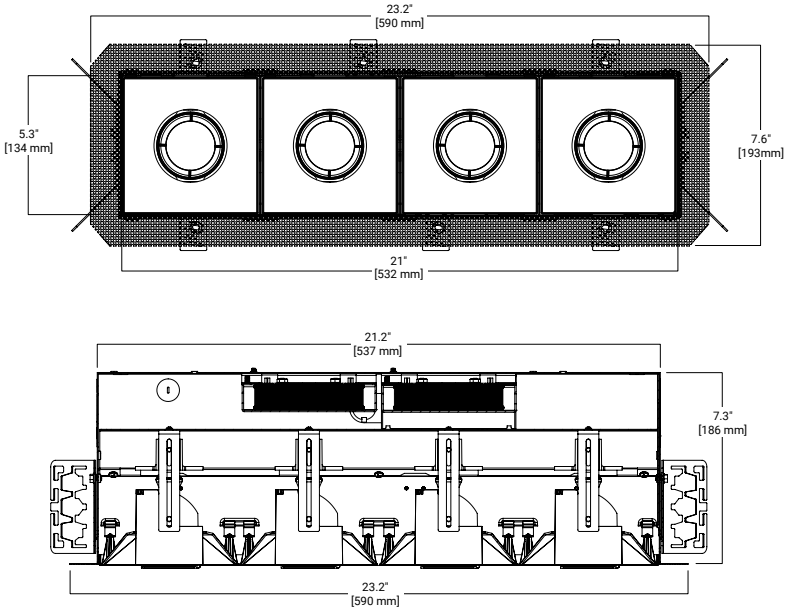

Cooper Lighting Solutions
1121 Highway 74 South
Peachtree City, GA 30269
P: 770-486-4800
www.cooperlighting.com

© 2020 Cooper Lighting Solutions
All Rights Reserved.

Specifications and dimensions
subject to change without notice.