OUTDOOR LED LIGHTING SOLUTIONS

2020 | STOCK CATALOG

LUMARK



HALO OUTDOOR



eaton.com/outdoorstockcatalog

COOPER Lighting Solutions

BUILD BRIGHTER



We make endless possibilities work by providing you with an innovative portfolio of lighting solutions for buildings, homes and communities. Our products are designed to simplify and personalize lighting for consumers' unique needs. We solve complex problems and business challenges by applying data insight from our smart lighting solutions to create safer communities. Whether you're planning for a new manufacturing facility, park or home, we've got you covered.

To find this catalog online visit eaton.com/outdoorstockcatalog

Lumark

High quality outdoor lighting that provides easy installation, area safety, and energy savings in commercial and industrial spaces.

HALO Outdoor

For over 60 years, HALO has been the industry-leader in residential indoor lighting. Bringing the same high level of quality and innovation, HALO Outdoor provides security and utility lighting for residential and light commercial applications.

Product Features & Technologies

Cooper Lighting Solutions is the source for superior quality lighting products in all markets, bringing creativity, insight, and knowledge together to provide the best and the brightest lighting solutions. Below you will find descriptions that detail some of the features and technology icons listed throughout this catalog.

For more information, contact your representative or visit **cooperlighting.com**

RoHS

All products in this catalog are RoHS Compliant. This Restriction of Hazardous Substances directive ensures there is no use of specific hazardous materials found in electrical and electronic products.

Warranty

All products in this catalog are covered by a standard 5-year limited warranty (exceptions noted by product). Warranty details can be found on Eaton.com.

cULus® Listed

All products listed in this catalog have been evaluated, tested, and listed by Underwriters Laboratories for product safety certification in US and Canada.

IP66 Rated

The products with this notation are tested to be water resistant and also protected against dust, dirt, sand and debris, all while maintaining long luminaire life.

DLC

These families have SKUs that are DesignLights Consortium® Qualified. Refer to www.designlights.org Qualified Products List under Family Models for details.

DLC Premium

These families have SKUs that are DesignLights Consortium® Premium Qualified. Refer to www.designlights.org Qualified Products List under Family Models for details.

Solar Powered

These solar powered luminaires provide a level of safety and security in applications where line voltage is not available. With easy installation and included solar panel, all you need is sunlight.

Controls Key	
-	No additional integrated controls. Fixture only manually switched ON/OFF
D2D	Dusk-to-dawn operation by way of an integrated (or button-type) photocontrol
3P	Integrated 3-PIN NEMA twistlock photocontrol receptacle (photocontrol sold separately)
3P-PC	Integrated 3-PIN NEMA twistlock photocontrol receptacle (photocontrol included)
M	Motion detection for ON/OFF operation (degrees of detection)
SENS	Integrated, programmable motion and occupancy detection for ON/Dim operation with integrated dusk-to-dawn capability

Area / Site 4-9

Ceiling Mount 10-13

Smart Lighting 14-15

Floodlighting 16-23

Wall Mount 24-29

Product specifications subject to change without notice. Visit cooperlighting.com to find the most up to date information.

Area/Site Lighting

Lumark and HALO Outdoor LED area and site solutions provide a uniform lighting experience for improved safety by illuminating walking paths, potential obstacles as well as providing substantial energy savings over traditional sources. These patented designs offer a mix of mounting heights, optical designs, and control options for a variety of applications.



Lumark Prevail | Prevail XL



The Prevail / Prevail XL LED area/site luminaire combines energy efficiency and long term reliability in an advanced, modern design. The precision engineered optics provide uniform illumination resulting in greater pole spacing. The standard versatile mounting arm facilitates ease of installation for new or retrofit applications such as walkways, parking lots, roadways and building areas.

- Die-cast aluminum housing
- 4000K CCT, 70CRI
- Round or square pole mount
- 15-40’ mounting heights

0-10V DIMMING

IP66 Rated

Catalog Number	HID Equivalent	Lumens	Watts	Voltage	Distribution	Controls	UPC
Prevail							
PRVS-C15-UNV-T3	150W	7,111	52	120-277V	T3	-	080083897261
PRVS-C15-UNV-T3-MSP/DIM-L30	150W	7,111	52	120-277V	T3	SENS	080083897278
PRVS-C15-UNV-T4	150W	7,088	52	120-277V	T4	-	080083897285
PRVS-C15-UNV-T4-MSP/DIM-L30	150W	7,088	52	120-277V	T4	SENS	080083897292
PRVS-C25-UNV-T3	250W	13,183	96	120-277V	T3	-	080083897308
PRVS-C25-UNV-T3-MSP/DIM-L30	250W	13,183	96	120-277V	T3	SENS	080083897315
PRVS-C25-UNV-T4	250W	13,140	96	120-277V	T4	-	080083897322
PRVS-C25-UNV-T4-MSP/DIM-L30	250W	13,140	96	120-277V	T4	SENS	080083897339
PRVS-C40-UNV-T3	400W	17,144	131	120-277V	T3	-	080083897346
PRVS-C40-UNV-T3-MSP/DIM-L30	400W	17,144	131	120-277V	T3	SENS	080083897353
PRVS-C40-UNV-T4	400W	17,087	131	120-277V	T4	-	080083897360
PRVS-C40-UNV-T4-MSP/DIM-L30	400W	17,087	131	120-277V	T4	SENS	080083897377
PRVS-C60-UNV-T3	450W	20,050	153	120-277V	T3	-	080083897384
PRVS-C60-UNV-T3-MSP/DIM-L30	450W	20,050	153	120-277V	T3	SENS	080083897414
PRVS-C60-UNV-T4	450W	19,984	153	120-277V	T4	-	080083897421
PRVS-C60-UNV-T4-MSP/DIM-L30	450W	19,984	153	120-277V	T4	SENS	080083897438
PRVS-C15-347-T3	150W	7,111	52	347V	T3	-	080083897445
PRVS-C15-347-T4	150W	7,088	52	347V	T4	-	080083897452
PRVS-C25-347-T3	250W	13,183	96	347V	T3	-	080083897469
PRVS-C25-347-T4	250W	13,140	96	347V	T4	-	080083897476
PRVS-C40-347-T3	400W	17,144	131	347V	T3	-	080083897483
PRVS-C40-347-T4	400W	17,087	131	347V	T4	-	080083897490
PRVS-C60-347-T3	450W	20,050	153	347V	T3	-	080083897506
PRVS-C60-347-T4	450W	19,984	153	347V	T4	-	080083897513
Prevail XL							
PRVS-XL-C75-UNV-T3	750W	26,120	176	120-277V	T3	-	080083906499
PRVS-XL-C75-UNV-T4	750W	26,098	176	120-277V	T4	-	080083906512
PRVS-XL-C100-UNV-T3	1,000W	31,061	217	120-277V	T3	-	080083906536
PRVS-XL-C100-UNV-T4	1,000W	31,035	217	120-277V	T4	-	080083906550
PRVS-XL-C125-UNV-T3	1,000W+	36,304	264	120-277V	T3	-	080083906574
PRVS-XL-C125-UNV-T4	1,000W+	36,274	264	120-277V	T4	-	080083906598
PRVS-XL-C150-UNV-T3	1,500W	41,124	285	120-277V	T3	-	080083906611
PRVS-XL-C150-UNV-T4	1,500W	41,089	285	120-277V	T4	-	080083906635
PRVS-XL-C175-UNV-T3	1,500W+	48,610	346	120-277V	T3	-	080083906659
PRVS-XL-C175-UNV-T4	1,500W+	48,569	346	120-277V	T4	-	080083906673

PFPRV Prevail

LED Pole and Fixture Combo

The Prevail™ LED pole and fixture combination makes ordering and installation of poles and fixtures simple. Included is all of the hardware and parts required to install a pole and luminaire: a pre-drilled square straight steel pole, anchor bolts, template, base cover, luminaire, and associated hardware kit.



Pre-matched and calculated pole and fixture combinations based off of your wind zone requirements eliminates complexity of selecting poles.

Stock configurations of poles and fixtures reduce time on the job with shorter lead times.

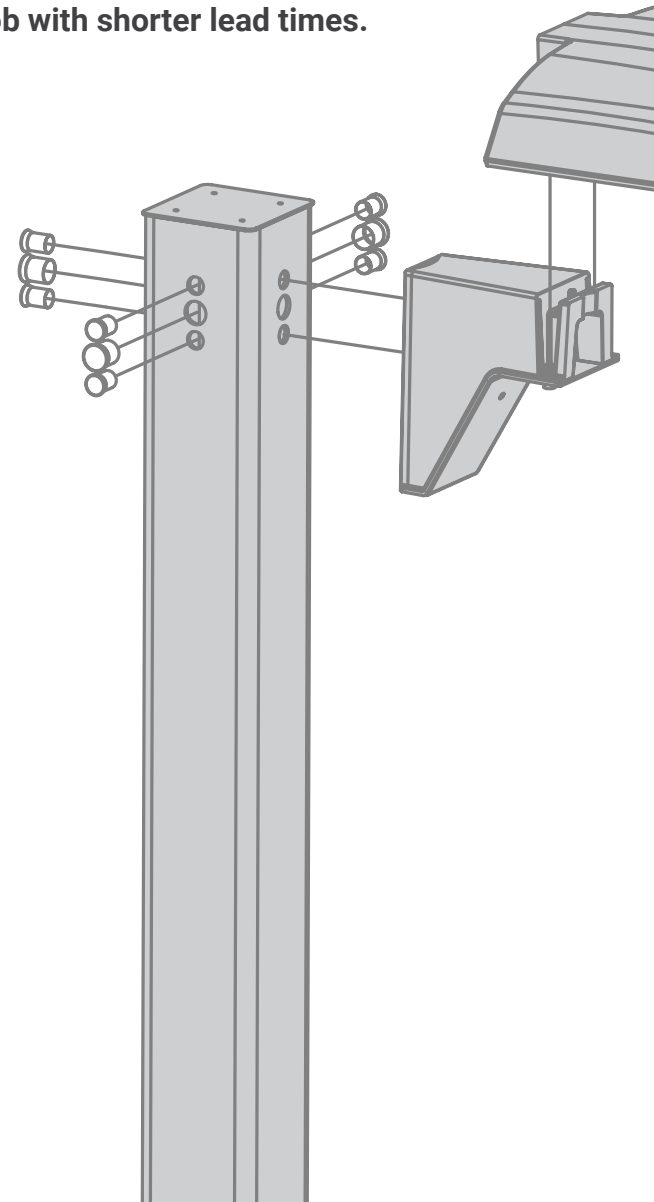

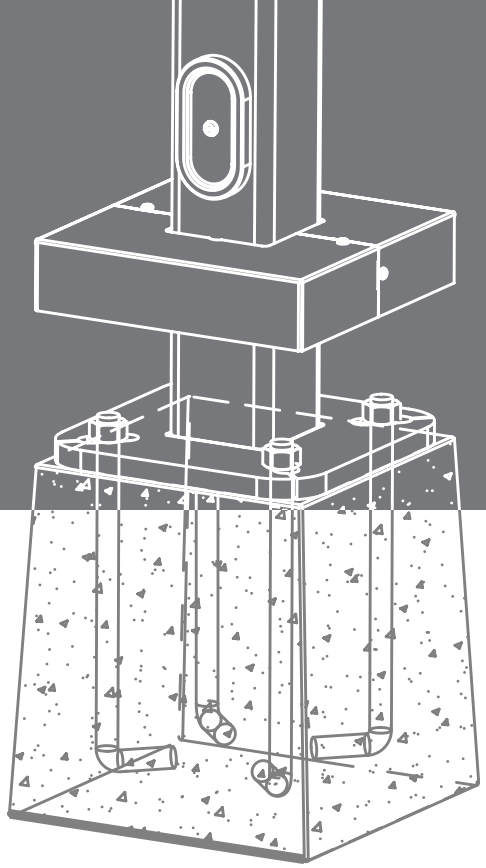

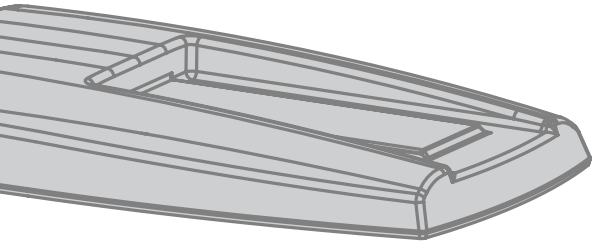



CHOOSE **YOUR MIX.**

WE'LL DO **THE REST.**

Sample Number: PFPRV-1-C25-T3-15

Series	Number of Fixtures	Light Engine	Distribution	Pole Height	Maximum Wind Zone (MPH)
PFPRV=Prevail Pole and Fixture Combo	**1**=1 **2**=2 **3**=3 **4**=4	**C15**=(1 LED) 7,100 Nominal Lumens **C25**=(2 LED) 13,100 Nominal Lumens **C40**=(2 LED) 17,100 Nominal Lumens **C60**=(2 LED) 20,000 Nominal Lumens	**T3**=Type III **T4**=Type IV	**15**=15ft **20**=20ft **25**=25ft **30**=30ft	**Blank**=80 **9**=90 **0**=100

Scan QR code for more information

Lumark Caretaker

The Caretaker LED area luminaire combines high performance, low maintenance and easy installation in a simple, extremely economic package that has been designed for years of worry-free operation. The Caretaker luminaire is ideal for pole or wall mounted security lighting, residential street lighting, perimeter area lighting, parking areas, loading platforms, boat docks, access drives and pathways.



SR-CARETAKER

- Die-cast aluminum housing
- 4000K CCT, 70CRI
- Wall, wood pole, or pipe mount
- 10-25’ Mounting heights

0-10V DIMMING **IP66 Optic**

Catalog Number	HID Equivalent	Lumens	Watts	Voltage	Area of Coverage	Controls	UPC
CTKRV1B	100-150W	4,515	29	120-277V	56’	3P-PC	080083865390
CTKRV2B	175W	7,110	50	120-277V	72’	3P-PC	080083865406
CTKRV3B	250W	9,741	71	120-277V	90’	3P-PC	080083865413
SR-CARETAKER	Small Refractive Lens Accessory						080083699087



HALO Outdoor Area Light Series

The AL area lights combine high performance optics with super bright energy-efficient LEDs. The dusk-to-dawn photocontrol for nighttime ON and daytime OFF settings provides a reliable security solution. The AL Series is ideal for illuminating large areas such as barns, side roads, sheds, or general security lighting. Available in bronze (BZ) or gray (GY) finishes.

- Die-cast aluminum housing
- 5000K CCT, 70CRI
- Wall or pipe mount
- 10-20' Mounting heights


AL1550LPC


AL2550LPC


AL3250LPCI


AL4850LPC


AL5550LPC


AL7550LPC

Catalog Number	Non-LED Equivalent	Lumens	Watts	Voltage	Area of Coverage	Controls	UPC
AL2550LPCBZ	50W HPS	2,900	25	120V	42-55'	D2D	080083663279
AL2550LPCGY	50W HPS	2,900	25	120V	42-55'	D2D	080083663262
AL3250LPCIBZ	70W HPS	3,750	32	120V	46-64'	D2D	080083804177
AL3250LPCIGY	70W HPS	3,750	32	120V	46-64'	D2D	080083804160
AL4850LPCBZ	100W HPS	5,444	57	120V	50-72'	D2D	080083837038
AL4850LPCGY	100W HPS	5,444	57	120V	50-72'	D2D	080083837014
AL7550LPCBZ	175W MH	8,167	62	120-277V	45-59'	3P-PC	080083837076
AL7550LPCGY	175W MH	8,167	62	120-277V	45-59'	3P-PC	080083837052



Ceiling Mount

Ceiling mounted products provide durable, wet-location rated lighting solutions for any outdoor, under-cover application. With a variety of mounting configurations, output adjustability and controls, these products offer the ideal solutions for new or retrofit applications.



Lumark Canopy

The CLCSLED canopy luminaire provides a slim, low-profile, die-cast traditional design with high performance energy efficient illumination. The CLCSLED mounts quickly to a variety of surfaces making it ideal for banks and retail drive-thrus, covered sidewalks and hospitality entryways.



IP66 Rated

Catalog Number	HID Equivalent	Lumens	Watts	Voltage	Color Temperature	Controls	UPC
CLCSLED-40-SM-UNV	150W	4,839	36	120-277V	4000K	-	080083776061
CLCSLED-40-SM-UNV-BPC	150W	4,839	36	120-277V	4000K	D2D	080083776269
CLCSLED-40-SM-UNV-7050	150W	4,739	36	120-277V	5000K	-	080083776184
CLCSLED-55-SM-UNV	175W	7,230	56	120-277V	4000K	-	080083776085
CLCSLED-55-SM-UNV-BPC	175W	7,230	56	120-277V	4000K	D2D	080083776283
CLCSLED-55-SM-UNV-7050	175W	6,878	56	120-277V	5000K	-	080083776207
CLCSLED-86-SM-UNV	250W	11,494	92	120-277V	4000K	-	080083776108
CLCSLED-86-SM-UNV-BPC	250W	11,494	92	120-277V	4000K	-	080083776306
CLCSLED-86-SM-UNV-7050	250W	11,279	92	120-277V	5000K	D2D	080083776221
CLCSLED-117-SM-UNV	400W	13,828	121	120-277V	4000K	D2D	080083776160
CLCSLED-117-SM-UNV-BPC	400W	13,828	121	120-277V	4000K	D2D	080083776320
CLCSLED-117-SM-UNV-7050	400W	13,882	121	120-277V	5000K	-	080083776245
CLCSPEND	3/4" Pendant Accessory, 6" long						080083776344



Lumark RPGC Round Parking Garage and Canopy

The Lumark RPGC Round Parking Garage and Canopy luminaire is an innovative, energy-efficient LED fixture. The RPGC is designed to replace traditional HID fixtures on a one-to-one basis from 150W up to 250W HID. The low profile, rugged construction, features a selectable lumen switch that allows for seamless integration into illuminating parking garages, canopy, stairwells and low-bay retail installations where high security illumination and energy savings are needed.



selectable lumens · IP65 Rated · DLC · DLC PREMIUM

- Die-cast aluminum housing
- 4000K CCT, 70CRI
- Junction box, surface, or pendant mount

Catalog Number	HID Equivalent	Lumens	Watts	Voltage	Controls	UPC
RPGC25S	150 - 250W	3,690 - 7,811	31 - 63	120-277V	-	080083885664
RPGC25S-347	150 - 250W	3,690 - 7,811	31 - 63	347V	-	080083885688
RPGC25-MS/DIM-L08	150 - 250W	3,690 - 7,811	31 - 63	120-277V	SENS	080083885701
RPGC25-MS/DIM-L20	150 - 250W	3,690 - 7,811	31 - 63	120-277V	SENS	080083885725
RPGC25-347-MS/DIM-L08	150 - 250W	3,690 - 7,811	31 - 63	347V	SENS	080083911844
RPGC25-347-MS/DIM-L20	150 - 250W	3,690 - 7,811	31 - 63	347V	SENS	080083911868

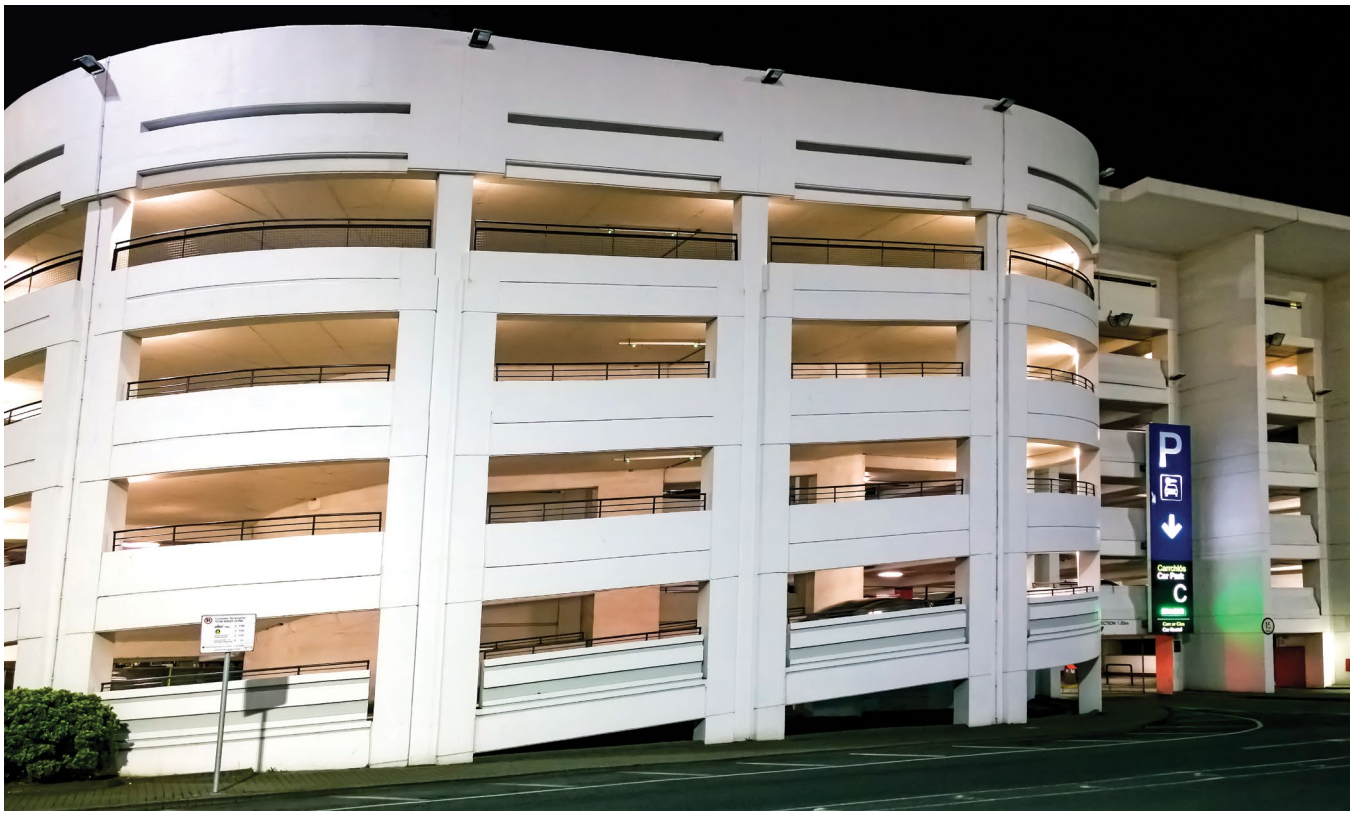

HALO Outdoor Diverge

The Diverge off-grid lighting system is a portable, rechargeable solution delivering an impressive 2,400 lumens at full charge. With multiple mounting configurations and its polycarbonate housing, the Diverge is suitable for outdoor and remote applications such as storage sheds, barns and boat docks.



DIMMABLE USB RECHARGEABLE SOLAR POWERED 1YEAR LIMITED WARRANTY

Catalog Number	Non-LED Equivalent	Lumens	Run Time	Color Temperature	Controls	UPC
SLWP2040M	2 x T8 17W (2') Fluorescent	2,400	80 min	4000K	M	080083859863



HALO Home Smart Lighting System

A flexible approach to smart home lighting

The HALO Home Smart Lighting System offers a convenient way to control your home's lights with the flexibility of individual room control to whole home control. Easily configure home lighting via Bluetooth connection using any smart device; no internet or hub required.



Install
Install HALO Home Bluetooth-enabled products

Connect
Download the secure HALO Home App

Control
Control your lights with your mobile device

For product availability and to learn more, see:
eaton.com/HALOHome



HALO Home Smart Outdoor Lighting

Wirelessly control HALO Home Smart LED light fixtures using the HALO Home mobile application from your mobile device. Available in bronze (B) and white (W) finishes. Custom controls and settings:

- Adjustable CCT from 3000K - 5000K
- Adjust duration, sensitivity and photocontrol settings using the mobile app
- Bluetooth control / Free Mobile App
- No hub required

HALO Home Square Die-cast CCT Floodlight Series



FTS20C



MST20C18

Bluetooth®

adjustable color

Catalog Number	Non-LED Equivalent	Head Count	Lumens	Watts	Voltage	Mounting	Controls	UPC
FTS20CB	180W Inc.	2	2,034	23	120-277V	Wall / Eave	-	080083810475
FTS20CW	180W Inc.	2	2,034	23	120-277V	Wall / Eave	-	080083810451
MST20C18B	180W Inc.	2	2,034	23	120-277V	Wall / Eave	M (180°)	080083810512
MST20C18W	180W Inc.	2	2,034	23	120-277V	Wall / Eave	M (180°)	080083810499

Floodlighting

Floodlighting calls for a high-intensity light designed to cover large areas with a wide beam spread. Lumark and HALO Outdoor provide a variety of outdoor floodlighting for solutions ranging from commercial industrial to residential and light commercial applications, and include features such as precise aiming, rugged construction and long life.



Lumark Night Falcon


NFFLD-S


NFFLD


NFFLD-L

The Night Falcon LED floodlight combines high-efficiency optics and superior thermal management in an energy efficient luminaire. The precision engineered optics deliver superior uniformity and excellent illumination to the targeted application. With adjustable mounting configurations and a simple installation, the Night Falcon is suitable for applications including area security lighting, building facade lighting, rail yards, and sign lighting.

- Die-cast aluminum housing
- 4000K CCT, 70CRI
- NEMA 6H x 6V wide distribution

IP66 Rated

Model	HID Equivalent	Lumens	Watts	Voltage	Mounting	Controls	UPC
Night Falcon Small							
NFFLD-S-C70-KNC-UNV	70W	2,682	20	120-277V	Knuckle	-	080083760282
NFFLD-S-C70-KNC-UNV-PC1	70W	2,682	20	120V	Knuckle	D2D	080083760350
NFFLD-S-C70-KNC-UNV-PC2	70W	2,682	20	207-277V	Knuckle	D2D	080083788194
NFFLD-S-C70-KNC-347	70W	2,682	20	347V	Knuckle	-	080083760367
NFFLD-S-C70-T-UNV	70W	2,682	20	120-277V	Trunnion	-	080083760299
NFFLD-S-C70-T-UNV-PC1	70W	2,682	20	120V	Trunnion	D2D	080083760343
NFFLD-S-C70-T-UNV-PC2	70W	2,682	20	207-277V	Trunnion	D2D	080083788187
NFFLD-S-C70-T-347	70W	2,682	20	347V	Trunnion	-	080083760374
NFFLD-S-C15-KNC-UNV	150W	5,797	51	120-277V	Knuckle	-	080083760268
NFFLD-S-C15-KNC-UNV-PC1	150W	5,797	51	120V	Knuckle	D2D	080083760329
NFFLD-S-C15-KNC-UNV-PC2	150W	5,797	51	207-277V	Knuckle	D2D	080083788170
Night Falcon							
NFFLD-C25-S	250W	10,530	85	120-277V	Slipfitter	-	080083801244
NFFLD-C25-E-UNV-66-S-CB-PER	250W	10,530	85	120-277V	Slipfitter	3P	
NFFLD-C25-T	250W	10,530	85	120-277V	Trunnion	-	080083801220
NFFLD-C40-S	400W	16,932	128	120-277V	Slipfitter	-	080083801206
NFFLD-C40-E-UNV-66-S-CB-PER	400W	16,932	128	120-277V	Slipfitter	3P	080083813391
NFFLD-C40-T	400W	16,932	128	120-277V	Trunnion	-	080083801183
NFFLD-C40-E-UNV-66-T-CB-PER	400W	16,932	128	120-277V	Trunnion	3P	080083813407
Night Falcon Large							
NFFLD-L-C75-S	750W	25,942	179	120-277V	Slipfitter	-	080083800964
NFFLD-L-C75-T	750W	25,942	179	120-277V	Trunnion	-	080083800988
NFFLD-L-C100-S	1,000W	33,941	252	120-277V	Slipfitter	-	080083800889
NFFLD-L-C100-S-347	1,000W	33,941	252	347V	Slipfitter	-	080083800926
NFFLD-L-C100-T	1,000W	33,941	252	120-277V	Trunnion	-	080083800902
NFFLD-L-C100-T-347	1,000W	33,941	252	347V	Trunnion	-	080083800940
Night Falcon Accessories							
TS2/NFFLD-CB	Top and Side Visor (Medium)						080083736270
VS/NFFLD	Vandal Shield (Medium)						080083747993
WG/NFFLD	Wire Guard (Medium)						080083748006

Lumark Tracer Floodlight


Tracer Large


Tracer Small Extended Visor


Tracer Small

Combining value and performance in a unique, patent-pending durable design, the Tracer LED floodlight luminaire delivers superior uniformity and excellent illumination to the targeted application. The rugged, die-cast housing is IP66 rated for exceptional durability and long-term reliability.
The Tracer floodlight provides design flexibility for applications such as landscape, accent, facade, or sign lighting.

- Die-cast aluminum housing
- 4000K CCT, 70CRK
- Adjustable 1/2" NPS knuckle mount

0-10V DIMMING **IP66 Rated**

Catalog Number	Non-LED Equivalent	Lumens	Watts	Voltage	Distribution	UPC
Tracer Small						
TCRS5S	50W Halogen	530	5	120-277V	Spot	080083884438
TCRS5M	50W Halogen	552	5	120-277V	Medium	080083884834
TCRS5W	50W Halogen	561	5	120-277V	Wide	080083884933
TCRS8S	70W Halogen	812	8	120-277V	Spot	080083884452
TCRS8M	70W Halogen	846	8	120-277V	Medium	080083884858
TCRS8W	70W Halogen	860	8	120-277V	Wide	080083884957
Tracer Large						
TCRL15S	100W Halogen	1,500	12	120-277V	Spot	080083884773
TCRL15M	100W Halogen	1,630	12	120-277V	Medium	080083884872
TCRL15W	100W Halogen	1,657	12	120-277V	Wide	080083884971
TCRL20S	120W Halogen	2,039	18	120-277V	Spot	080083884797
TCRL20M	120W Halogen	2,215	18	120-277V	Medium	080083884896
TCRL20W	120W Halogen	2,251	18	120-277V	Wide	080083884995
TCRL26S	150W Halogen	2,718	35	120-277V	Spot	080083884810
TCRL26M	150W Halogen	2,953	35	120-277V	Medium	080083884919
TCRL26W	150W Halogen	3,001	35	120-277V	Wide	080083885015



HALO Outdoor Floodlights

These floodlights are engineered with the latest LEDs, drivers and optics to meet any safety and security outdoor lighting needs. This broad line of security floods offers multiple controls solutions for maximum energy savings and adjustable, tilt-able floodlight heads for security area coverage. The Selectable CCT function allows the installer to choose a color temperature that will visually enhance the surrounding application. Available in Bronze (B) or White (W) finishes.

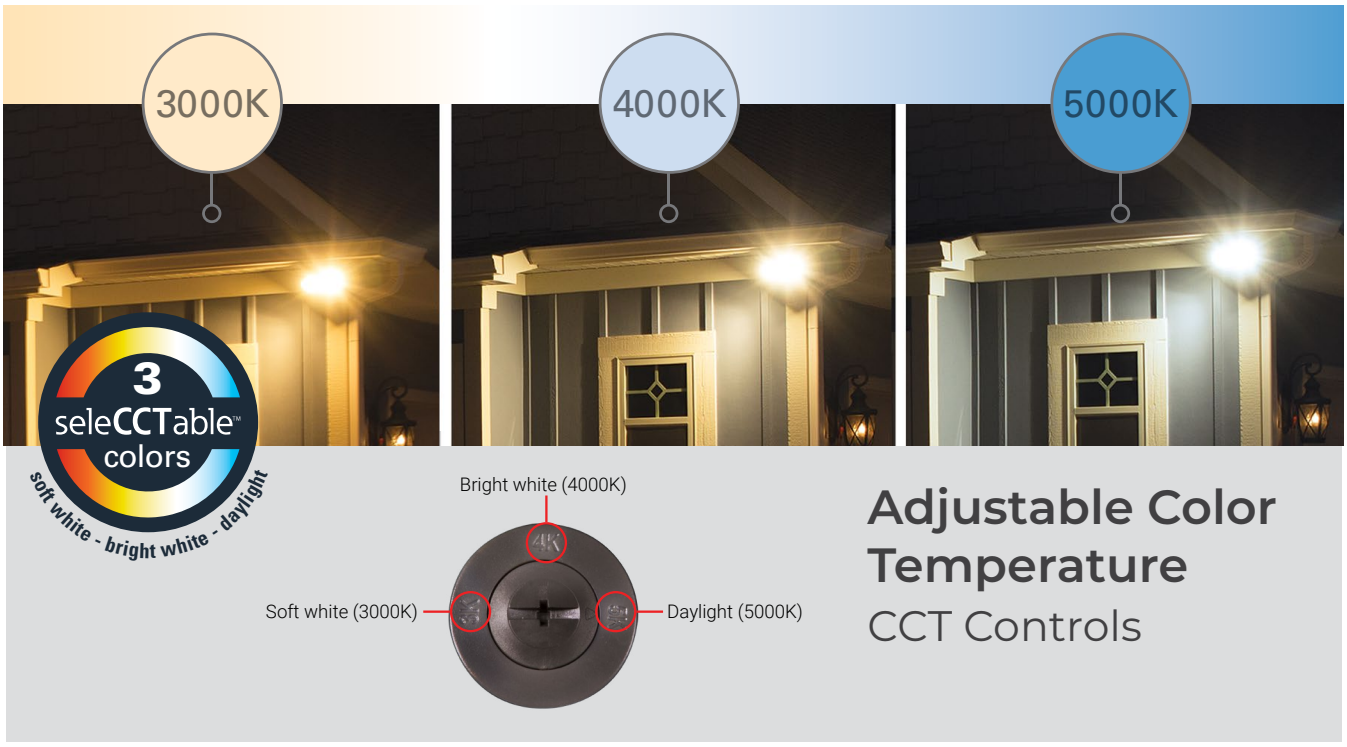

Square Die-cast CCT Motion Floodlight Series



MSS153T



MST203T



MSH303T

Catalog Number	Non-LED Equivalent	Head Count	Lumens	Watts	Voltage	Mounting	Controls	UPC
MSS153T18B	150W Inc.	1	1,503	17	120V	Wall / Eave	M (180°)	080083808908
MSS153T18W	150W Inc.	1	1,503	17	120V	Wall / Eave	M (180°)	080083810369
MST203T18B	180W Inc.	2	2,034	23	120V	Wall / Eave	M (180°)	080083810161
MST203T18W	180W Inc.	2	2,034	23	120V	Wall / Eave	M (180°)	080083810185
MST203T27B	180W Inc.	2	2,034	23	120V	Wall / Eave	M (270°)	080083810246
MST203T27W	180W Inc.	2	2,034	23	120V	Wall / Eave	M (270°)	080083810260
MSH303T18W	280W Inc.	3	2,853	32	120V	Wall / Eave	M (180°)	080083837748

Square Die-cast CCT Dusk-to-Dawn Floodlight Series



FSS153TI



FSL203-303TI



FSL503TI

Catalog Number	Non-LED Equivalent	Head Count	Lumens	Watts	Voltage	Mounting	Controls	UPC
FSS153TIB	150W Inc.	1	1,503	17	120V	Wall / Eave	D2D	080083809851
FSS153TIW	150W Inc.	1	1,503	17	120V	Wall / Eave	D2D	080083809974
FSL203TIB	180W Inc.	1	1,916	23	120V	Wall / Eave	D2D	080083809691
FSL203TIW	180W Inc.	1	1,916	23	120V	Wall / Eave	D2D	080083809714
FSL303TIB	280W Inc.	1	2,900	32	120V	Wall / Eave	D2D	080083809776
FSL303TIW	280W Inc.	1	2,900	32	120V	Wall / Eave	D2D	080083809790
FSL503TIB	150W MH	1	5,800	52	120-277V	Wall / Eave	D2D	080083836062
FSL503TIW	150W MH	1	5,800	52	120-277V	Wall / Eave	D2D	080083867134

Square Die-cast CCT Switch Controlled Floodlight Series



FSS153T



FSL203-303T



FSL503T

Catalog Number	Non-LED Equivalent	Head Count	Lumens	Watts	Voltage	Mounting	Controls	UPC
FSS153TB	150W Inc.	1	1,503	17	120-277V	Wall / Eave	-	080083809837
FSS153TW	150W Inc.	1	1,503	17	120-277V	Wall / Eave	-	080083809998
FSL203TB	180W Inc.	1	1,916	23	120-277V	Wall / Eave	-	080083809677
FSL203TW	180W Inc.	1	1,916	23	120-277V	Wall / Eave	-	080083809738
FSL303TB	280W Inc.	1	2,900	32	120-277V	Wall / Eave	-	080083809752
FSL303TW	280W Inc.	1	2,900	32	120-277V	Wall / Eave	-	080083809813
FSL503TB	150W MH	1	5,800	52	120-277V	Wall / Eave	-	080083867110
FSL503TW	150W MH	1	5,800	52	120-277V	Wall / Eave	-	080083867158

Square Die-cast CCT Switch Controlled Floodlight Series (continued)



FTS203T



FHS303T

Catalog Number	Non-LED Equivalent	Head Count	Lumens	Watts	Voltage	Mounting	Controls	UPC
FTS203TB	180W Inc.	2	2,034	23	120-277V	Wall / Eave	-	080083810390
FTS203TW	180W Inc.	2	2,034	23	120-277V	Wall / Eave	-	080083810383
FHS303TB	280W Inc.	3	2,853	32	120-277V	Wall / Eave	-	080083810437
FHS303TW	280W Inc.	3	2,853	32	120-277V	Wall / Eave	-	080083810413
FHS303TWH	280W Inc.	3	2,853	32	120-277V	Wall / Eave	-	080083811267



Round Die-cast Floodlight Series



FTR1740L



FTR1740LPC



MST18R17L

Catalog Number	Non-LED Equivalent	Head Count	Lumens	Watts	Voltage	Mounting	Controls	UPC
FTR1740L	150W Inc.	2	1,600	21	120V	Wall / Eave	-	080083705061
FTR1740LW	150W Inc.	2	1,600	21	120V	Wall / Eave	-	080083705078
FTR1740LPC	150W Inc.	2	1,600	21	120V	Wall / Eave	D2D	080083705108
FTR1740LPCW	150W Inc.	2	1,600	21	120V	Wall / Eave	D2D	080083705115
MST18R17L	150W Inc.	2	1,600	21	120V	Wall / Eave	M (180°)	080083703173
MST18R17LW	150W Inc.	2	1,600	21	120V	Wall / Eave	M (180°)	080083703166

Square Polycarbonate CCT Motion Floodlight Series



MST18VC



MST28VC

Catalog Number	Non-LED Equivalent	Head Count	Lumens	Watts	Voltage	Mounting	Controls	UPC
MST18VCB	150W Inc.	2	1,346	13	120V	Wall / Eave	M (180°)	080083837236
MST18VCW	150W Inc.	2	1,346	13	120V	Wall / Eave	M (180°)	080083837250
MST28VCB	180W Inc.	2	2,200	20	120V	Wall / Eave	M (180°)	080083837274
MST28VCW	180W Inc.	2	2,200	20	120V	Wall / Eave	M (180°)	080083837298



Square Polycarbonate CCT Dusk-to-Dawn Floodlight Series



FT18VCI



FT28VCI

Catalog Number	Non-LED Equivalent	Head Count	Lumens	Watts	Voltage	Mounting	Controls	UPC
FT18VCIB	150W Inc.	2	1,346	13	120V	Wall / Eave	D2D	080083837113
FT18VCIW	150W Inc.	2	1,346	13	120V	Wall / Eave	D2D	080083837137
FT28VCIB	180W Inc.	2	2,200	20	120V	Wall / Eave	D2D	080083840168
FT28VCIW	180W Inc.	2	2,200	20	120V	Wall / Eave	D2D	080083837199

Square Polycarbonate CCT Switch Controlled Floodlight Series



FT18VC



FT28VC

Catalog Number	Non-LED Equivalent	Head Count	Lumens	Watts	Voltage	Mounting	Controls	UPC
FT18VCB	150W Inc.	2	1,346	13	120V	Wall / Eave	-	080083837090
FT18VCW	150W Inc.	2	1,346	13	120V	Wall / Eave	-	080083837151
FT28VCB	180W Inc.	2	2,200	20	120V	Wall / Eave	-	080083837175
FT28VCW	180W Inc.	2	2,200	20	120V	Wall / Eave	-	080083837212



Solar Polycarbonate Floodlight Series

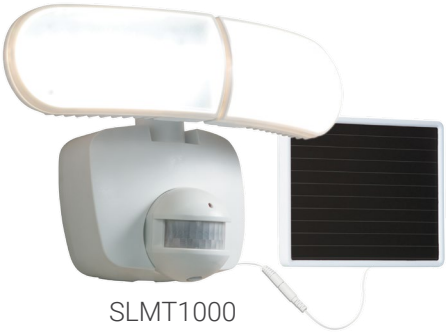

SLMT1000



MSLED600

SOLAR POWERED

Catalog Number	Non-LED Equivalent	Lumens	Run-Time	Mounting	Controls	UPC
MSLED600	50W Inc.	680	100 min	Wall Mount Only	M (180°)	080083787104
MSLED600W	50W Inc.	680	100 min	Wall Mount Only	M (180°)	080083787128
SLMT1000B	75W Inc.	1,000	70 min	Wall Mount Only	M (180°)	080083859894
SLMT1000W	75W Inc.	1,051	70 min	Wall Mount Only	M (180°)	080083859801

Wall Mount

Wall mounted luminaires can provide unique architectural styling to a building while illuminating the adjacent areas for increased pedestrian safety. These LED products offer a mix of mounting heights, optical distributions, and control options for a variety of lighting applications.



Lumark Axcent

The Axcent LED wall mount luminaires delivers value through superior performance, reliability, and mounting versatility, all in a sleek, architectural style. The Axcent is ideal for applications that require maximum light distribution such as building entrances, vehicle ramps and schools. Available in carbon bronze finish.



Refractive lens



Full cutoff

- Die-cast aluminum housing
- 4000K CCT, 70CRI
- Up to 40' mounting heights

0-10V DIMMING **IP66 Rated**

Catalog Number	HID Equivalent	Lumens	Watts	Voltage	Lens Type	UPC
Axcent Small						
AXCS1A	70W	1,806	14	120-277V	Full Cutoff	080083887965
AXCS1ARL	70W	1,915	14	120-277V	Refractive Lens	080083887972
AXCS2A	100W	2,561	21	120-277V	Full Cutoff	080083887989
AXCS2ARL	100W	2,716	21	120-277V	Refractive Lens	080083887996
AXCS3A	150W	3,537	27	120-277V	Full Cutoff	080083888009
AXCS3ARL	150W	3,704	27	120-277V	Refractive Lens	080083888016
AXCS4A	250W	5,520	44	120-277V	Full Cutoff	080083888023
AXCS4ARL	250W	5,858	44	120-277V	Refractive Lens	080083888030
AXCS5A	320W	6,300	52	120-277V	Full Cutoff	080083888047
AXCS5ARL	320W	6,699	52	120-277V	Refractive Lens	080083888054
Axcent Large						
AXCL6A	320W	7,594	56	120-277V	Full Cutoff	080083811564
AXCL6ARL	320W	7,809	56	120-277V	Refractive Lens	080083811649
AXCL8A	400W	9,696	72	120-277V	Full Cutoff	080083811588
AXCL8ARL	400W	9,970	72	120-277V	Refractive Lens	080083811663
AXCL10A	400W	13,283	102	120-277V	Full Cutoff	080083811601
AXCL10ARL	400W	13,641	102	120-277V	Refractive Lens	080083811687
AXCL12A	450W	16,823	123	120-277V	Full Cutoff	080083811625
AXCL12ARL	450W	17,346	123	120-277V	Refractive Lens	080083811700



Lumark Crosstour

The Crosstour LED wall pack provides super bright, energy efficient illumination in a low-profile, rugged, die-cast aluminum construction. The accessory kits enable the Crosstour to go from wall mount to floodlight applications. The Crosstour is ideal for pathway illumination, multi-use facilities, schools, restaurants and loading docks.



XTOR / XTOR Max

- Die-cast aluminum housing
- Universal back box mount
- 5000K CCT, 70CRI

IP66 Rated

Catalog Number	HID Equivalent	Lumens	Watts	Voltage	Finish	Lens Type	UPC
XTOR1B	70W	1,418	12	120-277V	Carbon Bronze	Full Cutoff	080083777969
XTOR2B	100W	2,135	18	120-277V	Carbon Bronze	Full Cutoff	080083592418
XTOR3B	150W	2,751	26	120-277V	Carbon Bronze	Full Cutoff	080083778041
XTOR4B	250W	4,269	38	120-277V	Carbon Bronze	Full Cutoff	080083778003
XTORFLD-KNC	Floodlight Knuckle Accessory Kit				Carbon Bronze		080083619115
XTORFLD-TRN	Floodlight Trunnion Accessory Kit				Carbon Bronze		080083619153
XTOR6B	320W	6,129	58	120-277V	Carbon Bronze	Full Cutoff	080083774807
XTOR6B-WT	320W	6,129	58	120-277V	Summit White	Full Cutoff	080083775132
XTOR6BRL	320W	6,225	58	120-277V	Carbon Bronze	Refractive Lens	080083774821
XTOR6BRL-WT	320W	6,225	58	120-277V	Summit White	Refractive Lens	080083775194
XTOR8B	400W	8,502	81	120-277V	Carbon Bronze	Full Cutoff	080083774814
XTOR8B-WT	400W	8,502	81	120-277V	Summit White	Full Cutoff	080083775101
XTOR8BRL	400W	8,635	81	120-277V	Carbon Bronze	Refractive Lens	080083774852
XTOR8BRL-WT	400W	8,635	81	120-277V	Summit White	Refractive Lens	080083775668
XTOR12B	450W	12,728	102	120-277V	Carbon Bronze	Full Cutoff	080083779574
XTOR12BRL	450W	13,458	102	120-277V	Carbon Bronze	Refractive Lens	080083779581



Lumark Traditional Glass Wall Packs

These LED wall packs provide traditional styling with high performance energy-efficient illumination. With broader area coverage on the wall, these wall packs are ideal for retrofit applications as well as vehicle ramps, tunnels, loading docks and general wall mounted area lighting.

- Die-cast aluminum housing
- Borosilicate refractive glass lens
- 4000K CCT, 70CRI



WPLLED



WPSLED



WPMLED

0-10V DIMMING

IP66 Rated

Catalog Number	HID Equivalent	Lumens	Watts	Voltage	UPC
Small					
WPSLED10	100W	4,733	39	120-277V	080083885664
Medium					
WPMLED10	100W	4,700	39	120-277V	080083885688
WPMLED15	150W	6,203	49	120-277V	080083885701
WPMLED25	250W	10,227	81	120-277V	080083885725



Lumark Square Glass Wall Packs



WPSQLED

IP66 Rated

Catalog Number	Non-LED Equivalent	Lumens	Watts	CCT	Voltage	Controls	UPC
WPSQLED-65-UNV	175W	7,108	64	4000K	120-277V	–	80083805662
WPSQLED-65-UNV-PC	175W	7,108	64	4000K	120-277V	D2D	80083805907
WPSQLED-65-UNV-7050	175W	7,446	64	5000K	120-277V	–	80083805723
WPSQLED-65-UNV-7050-PC	175W	7,446	64	5000K	120-277V	D2D	80083805969
WPSQLED-75-UNV	250W	7,706	75	4000K	120-277V	–	80083805686
WPSQLED-75-UNV-PC	250W	7,706	75	4000K	120-277V	D2D	80083805921
WPSQLED-75-UNV-7050	250W	7,918	75	5000K	120-277V	–	80083805747
WPSQLED-75-UNV-7050-PC	2580W	7,918	75	5000K	120-277V	D2D	80083805983
WPSQLED-100-UNV	320-450W	11,043	101	4000K	120-277V	–	80083805709
WPSQLED-100-UNV-PC	320-450W	11,043	101	4000K	120-277V	D2D	80083805945
WPSQLED-100-UNV-7050	320-450W	11,322	101	5000K	120-277V	–	80083805761
WPSQLED-100-UNV-7050-PC	320-450W	11,322	101	5000K	120-277V	D2D	80083806003

Lumark Light Commercial Wall Packs



WP5550L

Catalog Number	Non-LED Equivalent	Lumens	Watts	CCT	Voltage	Controls	UPC
WP5550LBZ	175 HPS	5621	51	5000K	120V	–	080083835850

HALO Outdoor Wall Packs



WP1050L and WP1850L



WP11

Catalog Number	Non-LED Equivalent	Lumens	Watts	CCT	Voltage	Controls	UPC
WP1050L	120W Inc.	1,000	12	5000K	120V	–	080083720668
WP1050LPC	120W Inc.	1,000	12	5000K	120V	D2D	080083720675
WP1850L	120W Inc.	1,600	19	5000K	120V	–	080083719853
WP1850LPC	120W Inc.	1,600	19	5000K	120V	D2D	080083720279
WP1135LPC	120W Inc.	1,244	14	3500K	120V	D2D	080083760398
WP1150LPC	120W Inc.	1,145	14	5000K	120V	D2D	080083754168

HALO Outdoor Entry Lights



FE0650L

Catalog Number	Finish	Non-LED Equivalent	Lumens	Watts	CCT	Voltage	Controls	UPC
FE0650LPC	Bronze	75W Inc.	811	9	5000K	120V	D2D	080083666928
FE0650LPCW	White	75W Inc.	927	9	5000K	120V	D2D	080083666935

HALO Outdoor Solar Powered Wedge Lights



MSLED300

SOLAR POWERED

1YEAR LIMITED WARRANTY

Catalog Number	Finish	Non-LED Equivalent	Lumens	Run-Time	Controls	UPC
MSLED300	Black	40W Inc.	300	60 min	M (120°)	080083728213
MSLED300W	White	40W Inc.	300	60 min.	M (120°)	080083748167

OUTDOOR LED LIGHTING SOLUTIONS

2020 | STOCK CATALOG

Lighting Product Lines

Ametrix
AtLite
Corelite
Ephesus
Fail-Safe
Halo
Halo Commercial
Halo Outdoor
Invue
io
Iris
Lumark
Lumière
McGraw-Edison
Metalux
MWS
Neo-Ray
Portfolio
RSA
Shaper
Streetworks
Sure-Lites

Controls Product Lines

Fifth Light Technology
Greengate
iLight (International Only)
iLumin
Zero 88

Connected Lighting Systems

Distributed Low-Voltage Power
HALO Home
iLumin Plus
LumaWatt Pro
WaveLinx
Trellix

COOPER Lighting Solutions

Cooper Lighting Solutions
1121 Highway 74 South
Peachtree City, GA 30269
P: 770-486-4800
www.cooperlighting.com

Canada Sales
5925 McLaughlin Road
Mississauga, Ontario L5R 1B8
P: 905-501-3000
F: 905-501-3172

© 2020 Cooper Lighting Solutions
All Rights Reserved
Printed in USA
Publication No. CA514002EN
January 2020

Cooper Lighting Solutions is a registered trademark.

All other trademarks are property of their respective owners.

Product availability, specifications, and compliances are subject to change without notice.