CEPC – Emergency Power Control

Catalog#	Prepared by
Project	Date
Comments	Type



CEPC

Overview

The Emergency Power Control (CEPC) device allows the control of emergency lighting by any Greengate lighting control panel or occupancy sensor.

Features

- Eliminates energy waste by allowing emergency lighting to be switched
- Fail safe operation
- Visible emergency power LED
- Visible regular power LED
- Integral test switch
- Automatic Diagnostic Test Feature – 2.5 second emergency test when load is turned off (CEPC-2 only)
- Senses local circuit power loss
- UL 924 listed, meets NEC, OSHA and NFPA safety codes

COOPER Lighting Solutions

Specifications

Connections	Normal Power Sensing: 120V or 277V
	Emergency Power: 120V or 277V
	Normal Power Switching: 120V or 277V
Load Ratings	20A Ballast Load Rating
	1800W Incandescent Load Rating at 120V
	1500W Incandescent Load Rating at 277V (CEPC-1 only)
Size	Body Size: 2.875"H x 1.75"W x 1.75"D
	Flushmount Size: 4.75"H x 2.75"W x 0.25"D
Mounting	Mounts to a 4.688" junction box with single gang plater ring
	UL 94-5VA Rated Plastic
Color	White
Operating Environment	Temperature: 32°F - 140°F (0°C - 60°C)
	For indoor use only
Compatibility	CEPC-2: Greengate LiteKeeper, ControlKeeper Relay Panels and Occupancy Sensor
	CEPC-2-D: Greengate ControlKeeper 4A or Room Controller
Standards	UL Approved UL 924 Listed c UL us

Description/Operation

The CEPC senses a local, single normal power circuit. As long as normal power is present, the CEPC permits normal and emergency switching of the lighting load from Cooper Lighting Solutions lighting control panels or occupancy sensors. If normal power is lost for any reason, the CEPC will force the connected emergency fixtures ON. The CEPC can be wired as either a control device along with a relay panel and occupancy sensor, or as a shunt to bypass line voltage devices when normal power fails. The CEPC-2-D is a universally compatible device that allows control of 4-wire emergency dimming loads. When normal power is lost, the CEPC-2-D will force the emergency fixtures to the full bright condition. Both CEPC models include a test switch feature for verifying proper functionality.

Installation

The CEPC can be installed down line of a Cooper Lighting Solutions lighting control panel or occupancy sensor and switchpack. The CEPC should be located next to the emergency fixture it is controlling.

Wiring Diagrams

Wiring Diagram for 2-Wire Non-Dimming Loads ((CEPC-2 wiring))

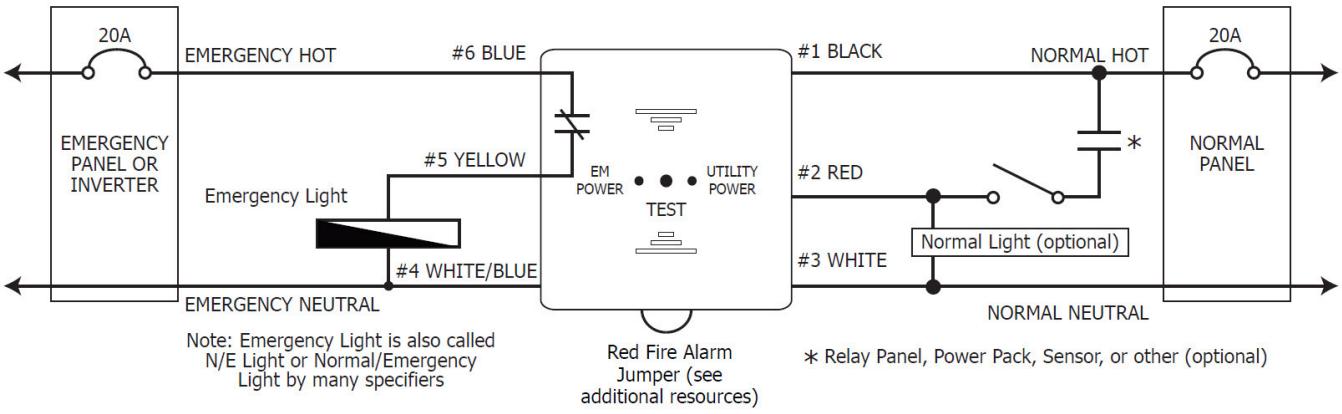

August 2018

Wiring Diagram for 4-Wire Dimming Loads (CEPC-2-D wiring)

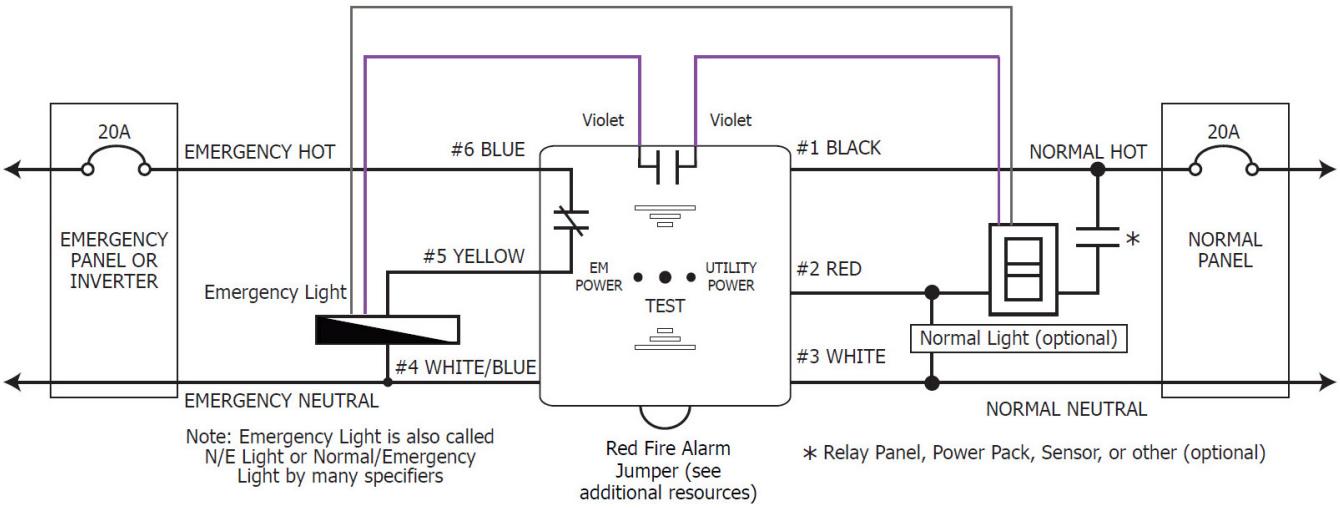

Ordering

This is an accessory for Cooper Lighting Solutions Lighting Control Panels and Greengate Occupancy Sensors. When ordering, specify the CEPC as a separate accessory.

Model	Description	Rating
CEPC-2	Emergency Power Control	120V or 277V
CEPC-2-D	0-10V Load Emergency Power Control 120V	120V or 277V
CEPC-2-UM	Emergency Power Control (Made in USA)	120V or 277V
CEPC-2-CUL	Emergency Power Control for Canada	120V or 277V
CEPC-2-D-CUL	0-10V Load Emergency Power Control for Canada	120V or 277V

Cooper Lighting Solutions
1121 Highway 74 South
Peachtree City, GA 30269
P: 770-486-4800
www.cooperlighting.com
For service or technical assistance:
1-800-553-3879

© 2020 Cooper Lighting Solutions
All Rights Reserved
Printed in USA
Publication No. TD503159EN
May 2019

Specifications and dimensions subject to change without notice.