

HALO®

MicroEdge™
LED Direct Mount Collection

COOPER Lighting Solutions

halolighting.com

HALO® MicroEdge Series

HLB downlights

HLB3 page 8
3-inch round and square



HLB4 page 12
4-inch round and square



HLB6 page 18
6-inch round and square



HLB8 page 22
8-inch round



HLB12 page 26
12-inch round



HLA adjustables

HLA3 page 28
3-inch round and square



HLA4 page 32
4-inch round and square





HALO® HLB



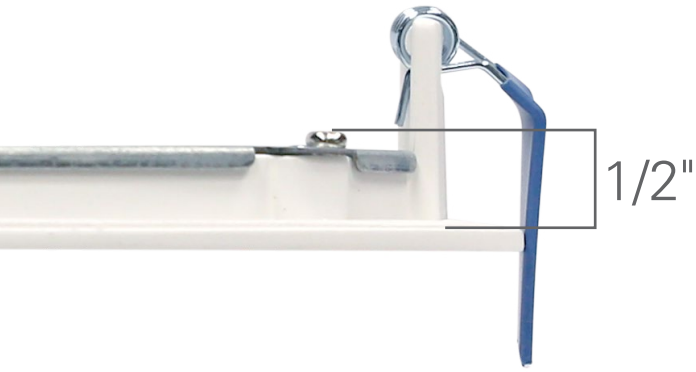

ultra-thin

The HLB is an ultra-thin LED lens downlight with a remote driver / junction box ideal for new construction and renovation work.

Simplified installation in drywall or suspended ceilings eliminates recessed cans saving time and money. The HLB can install from below the ceiling in as little as a 1-1/2" plenum height and can be used in direct contact with insulation and is airtight.

Distribution patterns work well in low to medium ceiling heights, applications are virtually universal including living and dining areas, bedrooms, closets, hallways, bathrooms, kitchens, basements, soffits, entryways and porches.

5 seleCCTable™ colors

The SeleCCTable™ technology puts flexibility at your fingertips. By using the switch located on the driver junction box, the user can choose from a range of five color temperatures 2700K - 5000K.

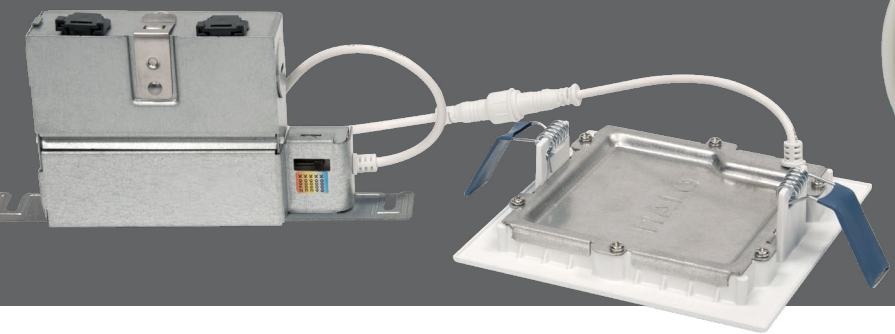

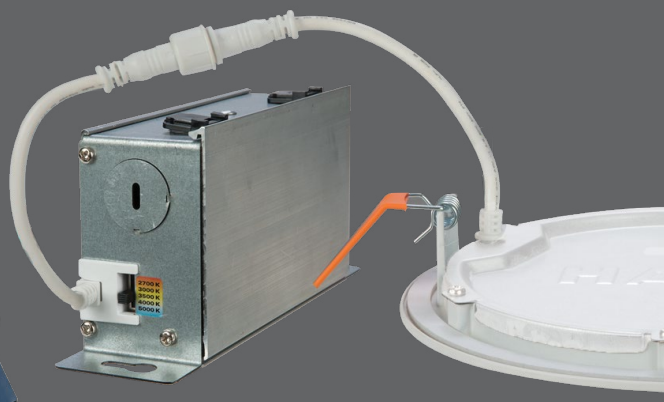

installs virtually anywhere



The HLB installs into a standard hole saw size cutout and is retained securely in place with springs.

The driver junction box installs through a cutout and can be positioned remotely from the fixture fitting. Mounting holes facilitate attachment to the building structure.











New Construction Mounting Frame

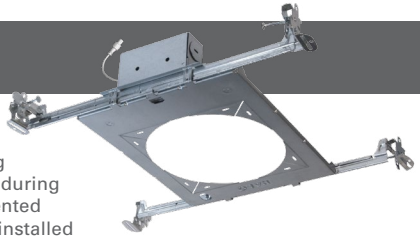

The new construction mounting frame locates the fixture fitting during electrical rough-in. HALO's patented Got Nail!® bar hangers are pre-installed supporting the mounting frame along rails.

During electrical rough-in, the driver / junction box attaches to the mounting frame with captive fasteners meeting code requirements for attachment to the building structure.

See page 37 for more info.

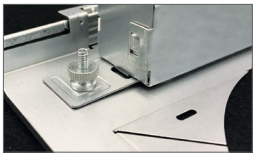

HL4RSMF = 4" round and square mounting frame
HL6RSMF = 6" round and square mounting frame
HL8RSMF = 8" round and square mounting frame

Square Installation

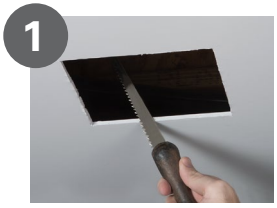







HLB3



5 seleCCTable colors
2700K • 3000K • 3500K
4000K • 5000K

- Up to 550 lumens
- Use to replace 40W A19 incandescent lamp
- 2700K, 3000K, 3500K, 4000K, 5000K CCT field select
- 2700K, 3000K, 3500K, 4000K fixed CCT
- 90 CRI
- 9W, 120V
- L70 @ 50,000 hrs
- HALO matte white finish
- No existing recessed housing or junction box required
- Fixture will not fit into existing housings or junction boxes
- Wet location listed (shower rated) covered ceiling
- Rated for direct contact to air permeable insulation
- AIR-TITE™ certified per ASTM-E283
- Textured lens provides smooth light distribution
- Five-year limited warranty

Refer to ENERGY STAR® Certified Products List. Can be used to comply with California Title 24 High Efficacy requirements. Certified to California Appliance Efficiency Database under JA8.

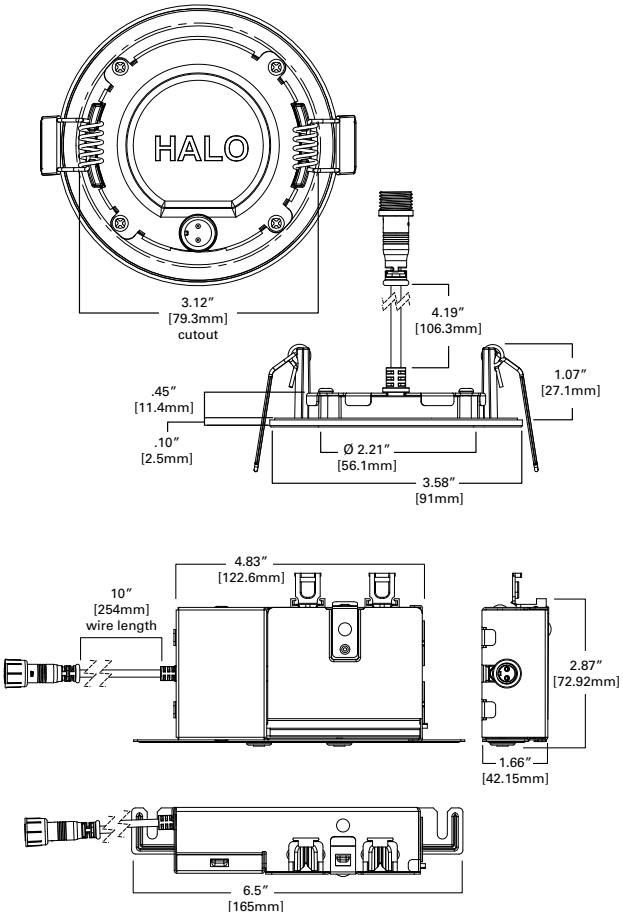

Ordering Information

SAMPLE NUMBER: HLB3059301EMWR

Models	Lumens	CRI / CCT	Driver	Finish	Packaging
HLB3 = 3-Inch LED lens downlight with remote driver / junction box	**05** = 500 lumen (nominal)	**927** = 90 CRI minimum, 2700K CCT **930** = 90 CRI minimum, 3000K CCT **935** = 90 CRI minimum, 3500K CCT **940** = 90 CRI minimum, 4000K CCT **9FS** = 90 CRI minimum, field selectable 2700K, 3000K, 3500K, 4000K or 5000K CCT	**1E** = 120V 60Hz, LE & TE phase cut 5% dimming	**MW** = matte white flange	**R** = recyclable 4-color unit carton suitable for point of purchase merchandizing display

Accessories

Oversized Trim Ring
HLB3ROTMW = 3″ round oversized trim, matte white

Decorative Trim Ring
HLB3RTRMMW = 3″ round decorative overlay, matte white
HLB3RTRMSN = 3″ round decorative overlay, satin nickel
HLB3RTRMTBZ = 3″ round decorative overlay, tuscan bronze

Extension Cable | Dedicated Driver/Jbox
HLB06EC - 6 ft. extension cable
HLB12EC - 12 ft. extension cable
HLB20EC - 20 ft. extension cable

Extension Cable | SeleCCTable Driver/ Jbox
HLB06FSEC - 6 ft. extension cable
HLB12FSEC - 12 ft. extension cable
HLB20FSEC - 20 ft. extension cable

UP TO $240[Δ] SAVINGS

[Δ] Savings are over the life of the HALO HLB3 luminaire.
Energy savings: $190
Replacement lamp savings: $50
Savings based on $0.128 per kilowatt hour, average six hours use per day, 50,000 hours of lamp usage, and 60W A19 lamp lumen equivalent.

Energy Data	
Lumens	500 Series
Input Voltage	120V
Input Current	100 (mA)
Input Power	9.0 (W)
Efficiency	60 (LPW)
Inrush (A)	2.2 A @ 42mS
THD	≤ 20%
PF	≥ 0.90
T Ambient	-30° - +40°C
Sound Rating	≤ 22dba

HLB3S



- Up to 550 lumens
- Use to replace 40W A19 incandescent lamp
- 2700K, 3000K, 3500K, 4000K, 5000K CCT field select
- 2700K, 3000K, 3500K, 4000K fixed CCT
- 90 CRI
- 9W, 120V
- L70 @ 50,000 hrs
- HALO matte white finish
- No existing recessed housing or junction box required
- Fixture will not fit into existing housings or junction boxes
- Wet location listed (shower rated) covered ceiling
- Rated for direct contact to air permeable insulation
- AIR-TITE™ certified per ASTM-E283
- Textured lens provides smooth light distribution
- Five-year limited warranty

Refer to ENERGY STAR® Certified Products List. Can be used to comply with California Title 24 High Efficacy requirements. Certified to California Appliance Efficiency Database under JA8.

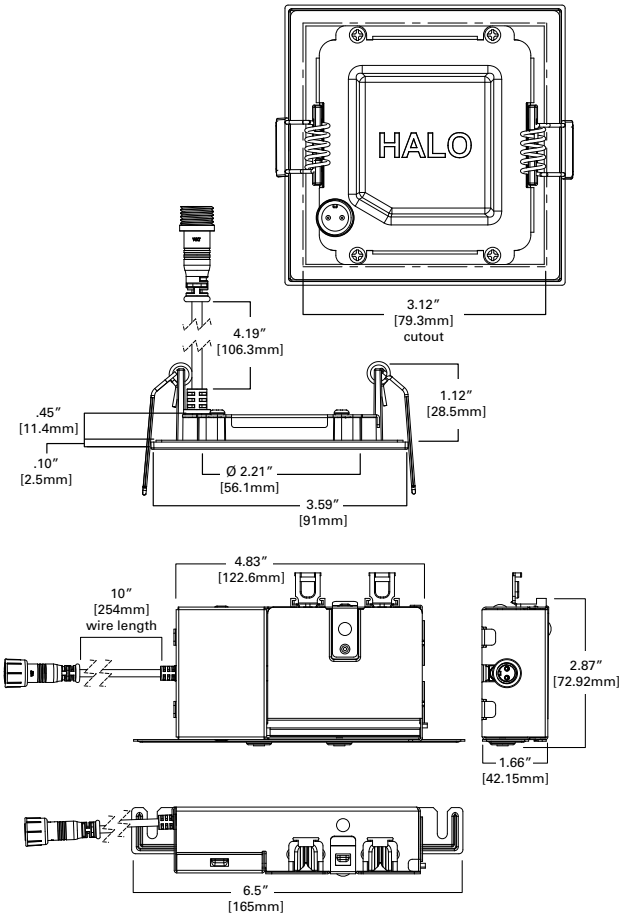

Ordering Information

SAMPLE NUMBER: HLB3S059301EMWR

Models	Lumens	CRI / CCT	Driver	Finish	Packaging
HLB3S = 3-Inch LED square lens downlight with remote driver / junction box	**05** = 500 lumen (nominal)	**927** = 90 CRI minimum, 2700K CCT **930** = 90 CRI minimum, 3000K CCT **935** = 90 CRI minimum, 3500K CCT **940** = 90 CRI minimum, 4000K CCT **9FS** = 90 CRI minimum, field selectable 2700K, 3000K, 3500K, 4000K or 5000K CCT	**1E** = 120V 60Hz, LE & TE phase cut 5% dimming	**MW** = matte white flange	**R** = recyclable 4-color unit carton suitable for point of purchase merchandizing display

Accessories

Oversized Trim Ring
HLB3SOTMW = 3″ square oversized trim, matte white

Decorative Trim Ring
HLB3STRMMW = 3″ square decorative overlay, matte white
HLB3STRMSN = 3″ square decorative overlay, satin nickel
HLB3STRMTBZ = 3″ square decorative overlay, tuscan bronze

Extension Cable | Dedicated Driver/Jbox
HLB06EC - 6 ft. extension cable
HLB12EC - 12 ft. extension cable
HLB20EC - 20 ft. extension cable

Extension Cable | SeleCCTable Driver/ Jbox
HLB06FSEC - 6 ft. extension cable
HLB12FSEC - 12 ft. extension cable
HLB20FSEC - 20 ft. extension cable

UP TO $240[Δ] SAVINGS

[Δ] Savings are over the life of the HALO HLB3S luminaire.
Energy savings: $190
Replacement lamp savings: $50
Savings based on $0.128 per kilowatt hour, average six hours use per day, 50,000 hours of lamp usage, and 60W A19 lamp lumen equivalent.

Energy Data	
Lumens	500 Series
Input Voltage	120V
Input Current	100 (mA)
Input Power	9.0 (W)
Efficiency	60 (LPW)
Inrush (A)	2.2 A @ 42mS
THD	≤ 20%
PF	≥ 0.90
T Ambient	-30° - +40°C
Sound Rating	≤ 22dba

HLB4



5 seleCCTable colors
2700K • 3000K • 3500K
4000K • 5000K

- Up to 750 lumens
- Use to replace 60W A19 incandescent lamp
- 2700K, 3000K, 3500K, 4000K, 5000K CCT field select
- 3000K, 4000K fixed CCT
- 90 CRI
- 12W, 120V or 11W, 120V-277V UNV
- L70 @ 50,000 hrs
- HALO matte white finish
- No existing recessed housing or junction box required
- Fixture will not fit into existing housings or junction boxes
- Wet location listed (shower rated) covered ceiling
- Rated for direct contact to air permeable insulation
- AIR-TITE™ certified per ASTM-E283
- Textured lens provides smooth light distribution
- Five-year limited warranty

Refer to ENERGY STAR® Certified Products List. Can be used to comply with California Title 24 High Efficacy requirements. Certified to California Appliance Efficiency Database under JA8.

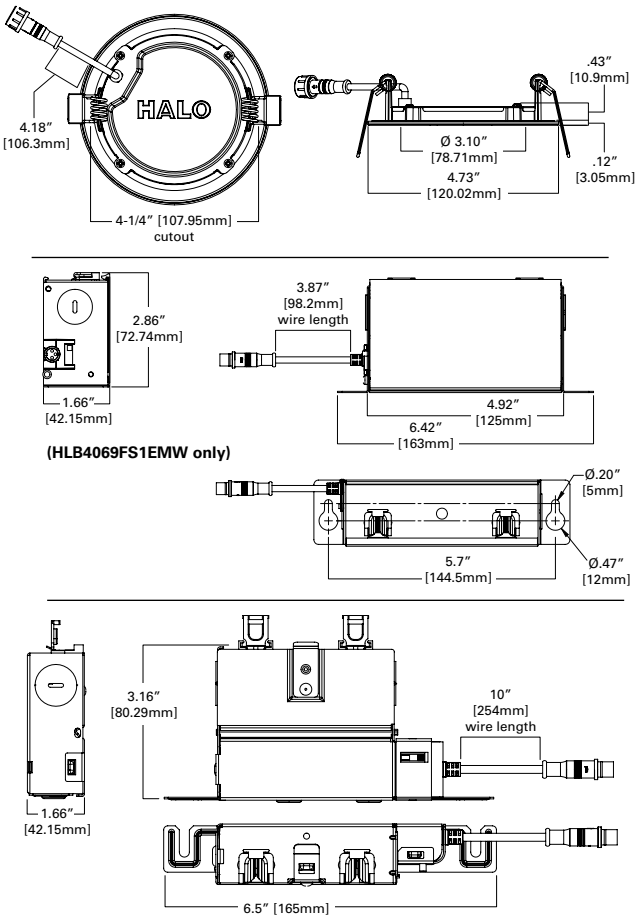

Ordering Information

SAMPLE NUMBER: HLB4069FS1EMWR

Models	Lumens	CRI / CCT	Driver	Finish	Packaging
HLB4 = 4-Inch ultra-thin LED lens downlight with remote driver / junction box	**06** = 600 lumen (nominal)	**930** = 90 CRI minimum, 3000K CCT **940** = 90 CRI minimum, 4000K CCT **9FS** = 90 CRI minimum, field selectable 2700K, 3000K, 3500K, 4000K or 5000K CCT	**1E** = 120V 60Hz, LE & TE phase cut 5% dimming **E010** = 120V-277V; 0-10V dim to 5%	**MW** = matte white flange	**R** = recyclable 4-color unit carton suitable for point of purchase merchandizing display

Accessories

Oversized Trim Ring
HLB4ROTMW = 4″ round oversized trim, matte white

Decorative Trim Ring
HLB4RTRMMW = 4″ round decorative overlay, matte white
HLB4RTRMSN = 4″ round decorative overlay, satin nickel
HLB4RTRMTBZ = 4″ round decorative overlay, tuscan bronze

Mounting Frame
HL4RSMF = 4″ round and square mounting frame

Extension Cable | Dedicated Driver/Jbox
HLB06EC - 6 ft. extension cable
HLB12EC - 12 ft. extension cable
HLB20EC - 20 ft. extension cable

Extension Cable | SeleCCTable Driver/ Jbox
HLB06FSEC - 6 ft. extension cable
HLB12FSEC - 12 ft. extension cable
HLB20FSEC - 20 ft. extension cable

Energy Data	
Lumens	600 Series
Input Voltage	120V
Input Current	100 (mA)
Input Power	12.0 (W)
Efficiency	60 (LPW)
Inrush (A)	2.2 A @ 42mS
THD	≤ 20%
PF	≥ 0.90
T Ambient	-30° - +40°C
Sound Rating	≤ 22dba

UP TO $377[Δ] SAVINGS

[Δ] Savings are over the life of the HALO HLB4 luminaire.
Energy savings: $327
Replacement lamp savings: $50
Savings based on $0.128 per kilowatt hour, average six hours use per day, 50,000 hours of lamp usage, and 60W A19 lamp lumen equivalent.

HLB4S

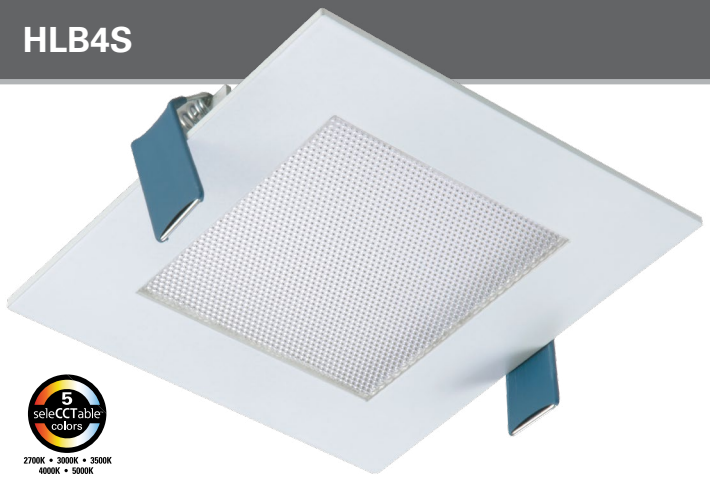

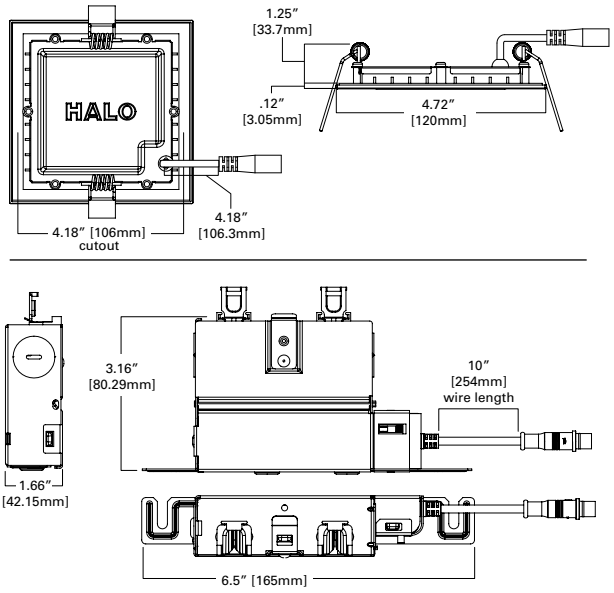

- Up to 700 lumens
- Use to replace 60W A19 incandescent lamp
- 2700K, 3000K, 3500K, 4000K, 5000K CCT field select
- 3000K, 4000K fixed CCT
- 90 CRI
- 12W, 120V or 11W, 120V-277V
- UNV
- L70 @ 50,000 hrs
- HALO matte white finish
- No existing recessed housing or junction box required
- Fixture will not fit into existing housings or junction boxes
- Wet location listed (shower rated) covered ceiling
- Rated for direct contact to air permeable insulation
- AIR-TITE™ certified per ASTM-E283
- Textured lens provides smooth light distribution
- Five-year limited warranty

ENERGY STAR | Can be used for IECC International Energy Conservation Code High Efficacy Compliance | Efficiency Standards T24 Can be used to comply with 2013 Title 24 Part 6 LED Enclosed Light Source Requirements (JA8) | RoHS | Showerlight | UL CERTIFIED SAFETY

Refer to ENERGY STAR® Certified Products List. Can be used to comply with California Title 24 High Efficacy requirements. Certified to California Appliance Efficiency Database under JA8.

air tight™

Ordering Information

SAMPLE NUMBER: HLB4S069FS1EMWR

Models	Lumens	CRI / CCT	Driver	Finish	Packaging
HLB4S = 4-Inch LED square lens downlight with remote driver / junction box	**06** = 600 lumen (nominal)	**930** = 90 CRI minimum, 3000K CCT **940** = 90 CRI minimum, 4000K CCT **9FS** = 90 CRI minimum, field selectable 2700K, 3000K, 3500K, 4000K or 5000K CCT	**1E** = 120V 60Hz, LE & TE phase cut 5% dimming **E010** = 120V-277V; 0-10V dim to 5%	**MW** = matte white flange	**R** = recyclable 4-color unit carton suitable for point of purchase merchandizing display

Accessories

Oversized Trim Ring
HLB4SOTMW = 4″ square oversized trim, matte white

Decorative Trim Ring
HLB4STRMMW = 4″ square decorative overlay, matte white
HLB4STRMSN = 4″ square decorative overlay, satin nickel
HLB4STRMTBZ = 4″ square decorative overlay, tuscan bronze

Mounting Frame
HL4RSMF = 4″ round and square mounting frame

Extension Cable | Dedicated Driver/Jbox
HLB06EC - 6 ft. extension cable
HLB12EC - 12 ft. extension cable
HLB20EC - 20 ft. extension cable

Extension Cable | SeleCCTable Driver/ Jbox
HLB06FSEC - 6 ft. extension cable
HLB12FSEC - 12 ft. extension cable
HLB20FSEC - 20 ft. extension cable

Energy Data	
Lumens	600 Series
Input Voltage	120V
Input Current	90 (mA)
Input Power	10.5 (W)
Efficiency	60 (LPW)
Inrush (A)	2.2 A @ 54mS
THD	≤ 20%
PF	≥ 0.90
T Ambient	-30° - +40°C
Sound Rating	≤ 22dba

UP TO $377[Δ] SAVINGS

[Δ] Savings are over the life of the HALO HLB4S luminaire.
Energy savings: $327
Replacement lamp savings: $50
Savings based on $0.128 per kilowatt hour, average six hours use per day, 50,000 hours of lamp usage, and 60W A19 lamp lumen equivalent.

HLB4SP

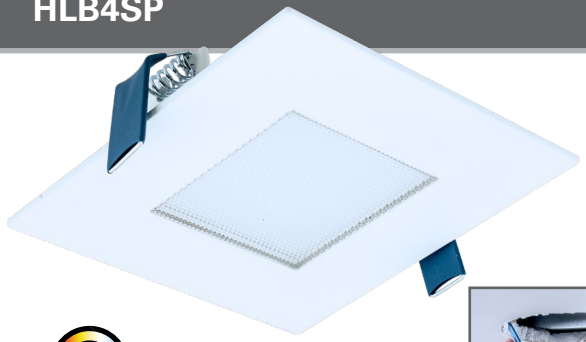



5 seleCCTable colors
2700K • 3000K • 3500K
4000K • 5000K

Square downlight with a round ceiling cutout

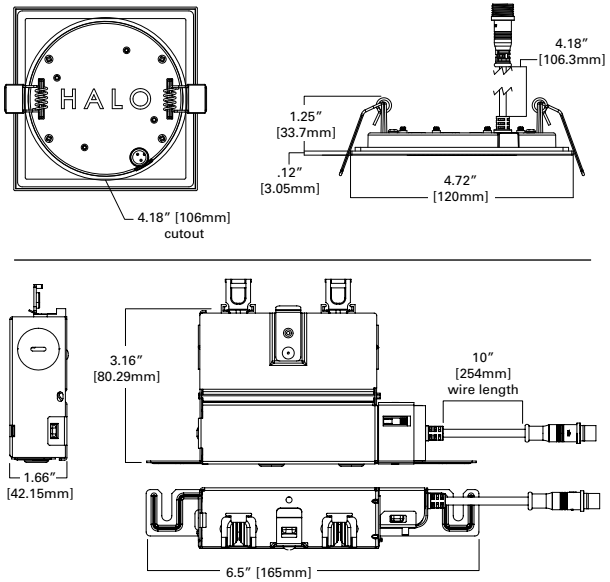

- Up to 750 lumens
- Use to replace 60W A19 incandescent lamp
- 2700K, 3000K, 3500K, 4000K, 5000K CCT field select
- 3000K, 4000K fixed CCT
- 90 CRI
- 12W, 120V
- L70 @ 50,000 hrs
- HALO matte white finish
- No existing recessed housing or junction box required
- Fixture will not fit into existing housings or junction boxes
- Wet location listed (shower rated) covered ceiling
- Rated for direct contact to air permeable insulation
- AIR-TITE™ certified per ASTM-E283
- Textured lens provides smooth light distribution
- Five-year limited warranty

Refer to ENERGY STAR® Certified Products List. Can be used to comply with California Title 24 High Efficacy requirements. Certified to California Appliance Efficiency Database under JA8.

Ordering Information

SAMPLE NUMBER: HLB4S069FS1EMWR

Models	Lumens	CRI / CCT	Driver	Finish	Packaging
HLB4SP = 4-Inch LED Square lens round ceiling cutout downlight with remote driver / junction box	**06** = 600 lumen (nominal)	**930** = 90 CRI minimum, 3000K CCT **940** = 90 CRI minimum, 4000K CCT **9FS** = 90 CRI minimum, field selectable 2700K, 3000K, 3500K, 4000K or 5000K CCT	**1E** = 120V 60Hz, LE & TE phase cut 5% dimming	**MW** = matte white flange	**R** = recyclable 4-color unit carton suitable for point of purchase merchandizing display

Accessories

Oversized Trim Ring
HLB4SOTMW = 4″ square oversized trim, matte white

Decorative Trim Ring
HLB4SPTRMMW = 4″ square pin decorative overlay, matte white
HLB4SPTRMSN = 4″ square pin decorative overlay, satin nickel
HLB4SPTRMTBZ = 4″ square pin decorative overlay, tuscan bronze

Mounting Frame
HL4RSMF = 4″ round and square mounting frame

Extension Cable | Dedicated Driver/Jbox
HLB06EC - 6 ft. extension cable
HLB12EC - 12 ft. extension cable
HLB20EC - 20 ft. extension cable

Extension Cable | SeleCCTable Driver/ Jbox
HLB06FSEC - 6 ft. extension cable
HLB12FSEC - 12 ft. extension cable
HLB20FSEC - 20 ft. extension cable

Energy Data	
Lumens	600 Series
Input Voltage	120V
Input Current	90 (mA)
Input Power	10.5 (W)
Efficiency	60 (LPW)
Inrush (A)	2.2 A @ 54mS
THD	≤ 20%
PF	≥ 0.90
T Ambient	-30° - +40°C
Sound Rating	≤ 22dba

UP TO $377[Δ] SAVINGS

[Δ] Savings are over the life of the HALO HLB4SP luminaire.
Energy savings: $327
Replacement lamp savings: $50
Savings based on $0.128 per kilowatt hour, average six hours use per day, 50,000 hours of lamp usage, and 60W A19 lamp lumen equivalent.

HLB6



5 seleCCTable colors
2700K • 3000K • 3500K
4000K • 5000K

- Up to 1100 lumens
- Use to replace 75W A19 incandescent lamp
- 2700K, 3000K, 3500K, 4000K, 5000K CCT field select
- 3000K, 4000K fixed CCT
- 90 CRI
- 16W, 120V or 15W, 120V-277V
- UNV
- L70 @ 50,000 hrs
- HALO matte white finish
- No existing recessed housing or junction box required
- Fixture will not fit into existing housings or junction boxes
- Wet location listed (shower rated) covered ceiling
- Rated for direct contact to air permeable insulation
- AIR-TITE™ certified per ASTM-E283
- Textured lens provides smooth light distribution
- Five-year limited warranty

Refer to ENERGY STAR® Certified Products List. Can be used to comply with California Title 24 High Efficacy requirements. Certified to California Appliance Efficiency Database under JA8.

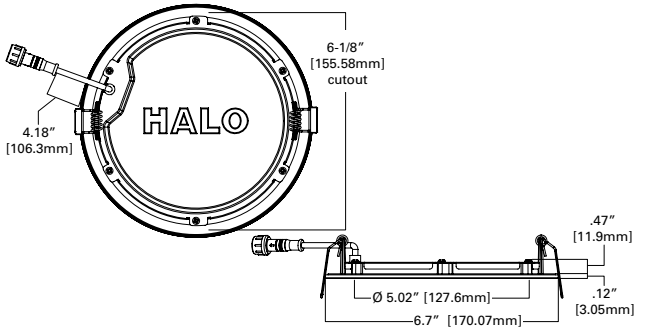

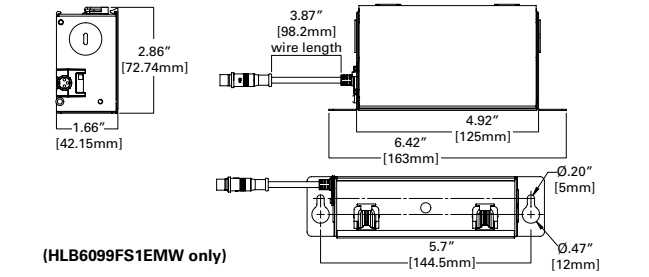

(HLB6099FS1EMW only)

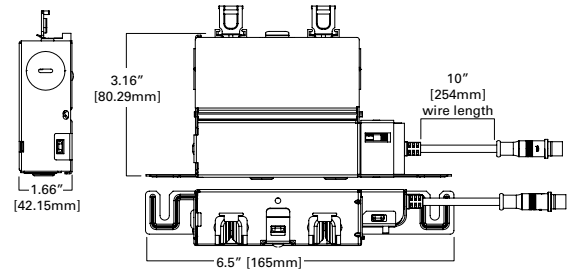

Ordering Information

SAMPLE NUMBER: HLB6099FS1EMWR

Models	Lumens	CRI / CCT	Driver	Finish	Packaging
HLB6 = 6-Inch ultra-thin LED lens downlight with remote driver / junction box	**09** = 900 lumen (nominal)	**930** = 90 CRI minimum, 3000K CCT **940** = 90 CRI minimum, 4000K CCT **9FS** = 90 CRI minimum, field selectable 2700K, 3000K, 3500K, 4000K or 5000K CCT	**1E** = 120V 60Hz, LE & TE phase cut 5% dimming **E010** = 120V-277V; 0-10V dim to 5%	**MW** = matte white flange	**R** = recyclable 4-color unit carton suitable for point of purchase merchandizing display

Accessories

Oversized Trim Ring
HLB6SOTMW = 6″ square oversized trim, matte white

Decorative Trim Ring
HLB6STRMMW = 6″ square decorative overlay, matte white
HLB6STRMSN = 6″ square decorative overlay, satin nickel
HLB6STRMTBZ = 6″ square decorative overlay, tuscan bronze

Mounting Frame
HL6RSMF = 6″ round and square mounting frame

Extension Cable | Dedicated Driver/Jbox
HLB06EC - 6 ft. extension cable
HLB12EC - 12 ft. extension cable
HLB20EC - 20 ft. extension cable

Extension Cable | SeleCCTable Driver/ Jbox
HLB06FSEC - 6 ft. extension cable
HLB12FSEC - 12 ft. extension cable
HLB20FSEC - 20 ft. extension cable

Energy Data	
Lumens	900 Series
Input Voltage	120V
Input Current	132 (mA)
Input Power	16.0 (W)
Efficiency	66 (LPW)
Inrush (A)	2.1 A @ 14mS
THD	≤ 20%
PF	≥ 0.90
T Ambient	-30° - +40°C
Sound Rating	≤ 22dba

UP TO $352[Δ] SAVINGS

[Δ] Savings are over the life of the HALO HLB6 luminaire.
Energy savings: $302
Replacement lamp savings: $50
Savings based on $0.128 per kilowatt hour, average six hours use per day, 50,000 hours of lamp usage, and 75W A19 lamp lumen equivalent.

HLB6S



- Up to 1100 lumens
- Use to replace 75W A19 incandescent lamp
- 2700K, 3000K, 3500K, 4000K, 5000K CCT
- 3000K, 4000K fixed CCT
- 90 CRI
- 16W, 120V or 15W 120V-277V UNV
- L70 @ 50,000 hrs
- HALO matte white finish
- No existing recessed housing or junction box required
- Fixture will not fit into existing housings or junction boxes
- Wet location listed (shower rated) covered ceiling
- Rated for direct contact to air permeable insulation
- AIR-TITE™ certified per ASTM-E283
- Textured lens provides smooth light distribution
- Five-year limited warranty

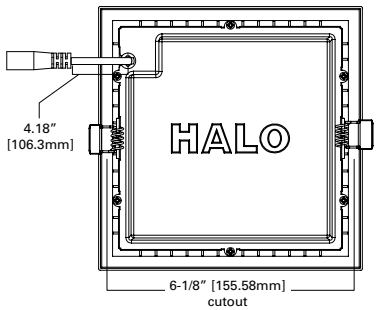

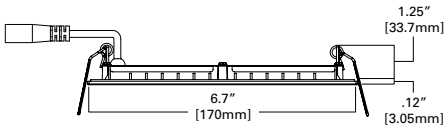

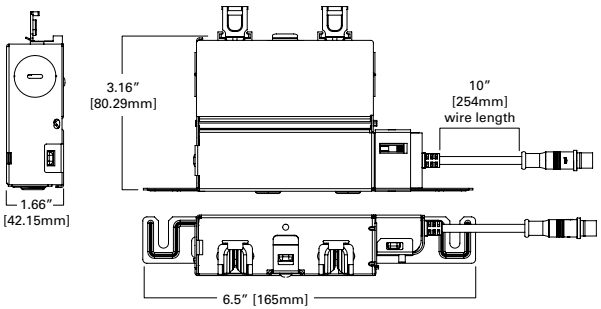

Refer to ENERGY STAR® Certified Products List. Can be used to comply with California Title 24 High Efficacy requirements. Certified to California Appliance Efficiency Database under JA8.

Ordering Information

SAMPLE NUMBER: HLB6S099FS1EMWR

Models	Lumens	CRI / CCT	Driver	Finish	Packaging
HLB6S = 6-Inch LED square lens downlight with remote driver / junction box	**09** = 900 lumen (nominal)	**930** = 90 CRI minimum, 3000K CCT **940** = 90 CRI minimum, 4000K CCT **9FS** = 90 CRI minimum, field selectable 2700K, 3000K, 3500K, 4000K or 5000K CCT	**1E** = 120V 60Hz, LE & TE phase cut 5% dimming **E010** = 120V-277V; 0-10V dim to 5%	**MW** = matte white flange	**R** = recyclable 4-color unit carton suitable for point of purchase merchandizing display

Accessories

Oversized Trim Ring
HLB6SOTMW = 6″ square oversized trim, matte white

Decorative Trim Ring
HLB6STRMMW = 6″ square decorative overlay, matte white
HLB6STRMSN = 6″ square decorative overlay, satin nickel
HLB6STRMTBZ = 6″ square decorative overlay, tuscan bronze

Mounting Frame
HL6RSMF = 6″ round and square mounting frame

Extension Cable | Dedicated Driver/Jbox
HLB06EC - 6 ft. extension cable
HLB12EC - 12 ft. extension cable
HLB20EC - 20 ft. extension cable

Extension Cable | SeleCCTable Driver/ Jbox
HLB06FSEC - 6 ft. extension cable
HLB12FSEC - 12 ft. extension cable
HLB20FSEC - 20 ft. extension cable

Energy Data	
Lumens	900 Series
Input Voltage	120V
Input Current	120 (mA)
Input Power	14.0 (W)
Efficiency	66 (LPW)
Inrush (A)	2.2 A @ 45mS
THD	≤ 20%
PF	≥ 0.90
T Ambient	-30° - +40°C
Sound Rating	≤ 22dba

UP TO $352[Δ] SAVINGS

[Δ] Savings are over the life of the HALO HLB6S luminaire.
Energy savings: $302
Replacement lamp savings: $50
Savings based on $0.128 per kilowatt hour, average six hours use per day, 50,000 hours of lamp usage, and 75W A19 lamp lumen equivalent.

HLB8 - 1600LM Phase Cut



5 seleCCTable colors
2700K • 3000K • 3500K
4000K • 5000K

- Up to 1600 lumens
- Use to replace 130W PAR38 incandescent lamp
- 2700K, 3000K, 3500K, 4000K, 5000K CCT field select
- 90 CRI
- 16W, 120V
- L70 @ 50,000 hrs
- HALO matte white finish
- No existing recessed housing or junction box required
- Fixture will not fit into existing housings or junction boxes
- Wet location listed (shower rated) covered ceiling
- Rated for direct contact to air permeable insulation
- AIR-TITE™ certified per ASTM-E283
- Textured lens provides smooth light distribution
- Five-year limited warranty

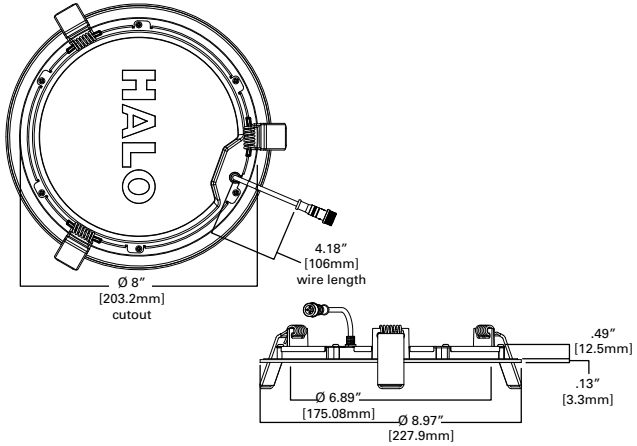

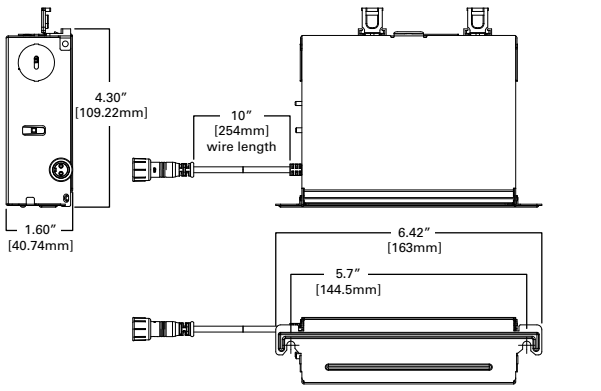

ENERGY STAR | Can be used for IECC International Energy Conservation Code High Efficacy Compliance | Efficiency Standards T24 | RoHS | Showerlight | UL CERTIFIED

Refer to ENERGY STAR® Certified Products List. Can be used to comply with California Title 24 High Efficacy requirements. Certified to California Appliance Efficiency Database under JA8.

air tite

Ordering Information

SAMPLE NUMBER: HLB8169FS1EMWR

Models	Lumens	CRI / CCT	Driver	Finish	Packaging
HLB8 = 8-Inch LED lens downlight with remote driver / junction box	**16** = 1600 lumen (nominal)	**9FS** = 90 CRI minimum, field selectable 2700K, 3000K, 3500K, 4000K or 5000K CCT	**1E** = 120V 60Hz, LE & TE phase cut 5% dimming	**MW** = matte white flange	**R** = recyclable 4-color unit carton suitable for point of purchase merchandising display

Accessories

Oversized Trim Ring
HLB8ROTMW = 8″ oversized trim, matte white

Mounting Frame
HL8RSMF = 8″ round and square mounting frame

Extension Cable | SeleCCTable Driver/Jbox
HLB06FSEC - 6 ft. extension cable
HLB12FSEC - 12 ft. extension cable
HLB20FSEC - 20 ft. extension cable

UP TO $609 SAVINGS[Δ]

[Δ] Savings are over the life of the HALO HLB8 luminaire.
Energy savings: $469
Replacement lamp savings: $140
Savings based on $0.128 per kilowatt hour, average six hours use per day, 50,000 hours of lamp usage, and 130W PAR38 lamp lumen equivalent.

Energy Data	
Lumens	1600 Series
Input Voltage	120V
Input Current	170 (mA)
Input Power	20.9 (W)
Efficiency	84.3 (LPW)
Inrush (A)	1.2 A @ 72µS
THD	≤ 20%
PF	≥ 0.90
T Ambient	-30° - +40°C
Sound Rating	≤ 22dba

HLB8 - Lumen Select - UNV



- 1400lm, 1900lm or 2400lm selectable lumen
- Use to replace 130W PAR38 incandescent lamp
- 2700K, 3000K, 3500K, 4000K, 5000K CCT field select
- 90 CRI
- 17-32W; 120V - 277V UNV
- L70 @ 50,000 hrs
- HALO matte white finish
- No existing recessed housing or junction box required
- Fixture will not fit into existing housings or junction boxes
- Wet location listed (shower rated) covered ceiling
- Rated for direct contact to air permeable insulation
- AIR-TITE™ certified per ASTM-E283
- Textured lens provides smooth light distribution
- Five-year limited warranty

Refer to ENERGY STAR® Certified Products List. Can be used to comply with California Title 24 High Efficacy requirements. Certified to California Appliance Efficiency Database under JA8.

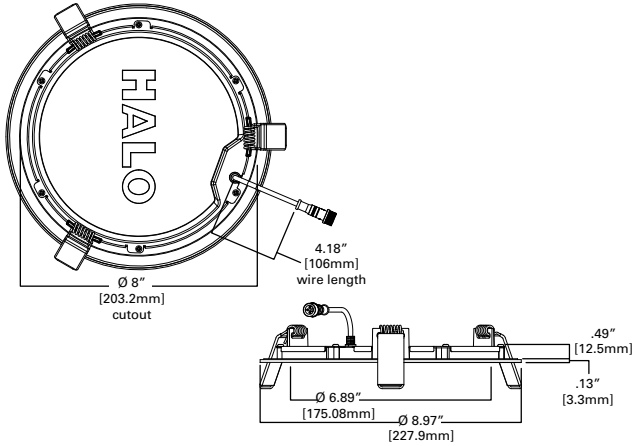

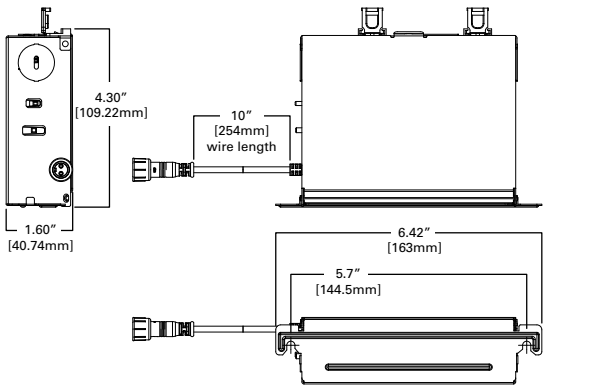

Ordering Information

SAMPLE NUMBER: HLB8LS9FSE010MWR

Models	Lumens	CRI / CCT	Driver	Finish	Packaging
HLB8 = 8-Inch LED lens downlight with remote driver / junction box	**LS** = Lumen selectable 1400, 1900, 2400 lumens (nominal)	**9FS** = 90 CRI minimum, field selectable 2700K, 3000K, 3500K, 4000K or 5000K CCT	**E010** = 120/277V 60Hz, 0-10V dimming	**MW** = matte white flange	**R** = recyclable 4-color unit carton suitable for point of purchase merchandising display

Accessories

Oversized Trim Ring
HLB8ROTMW = 8″ oversized trim, matte white

Mounting Frame
HL8RSMF = 8″ round and square mounting frame

Extension Cable | SeleCCTable Driver/Jbox
HLB06FSEC - 6 ft. extension cable
HLB12FSEC - 12 ft. extension cable
HLB20FSEC - 20 ft. extension cable

UP TO $752 SAVINGS

[Δ] Savings are over the life of the HALO HLB8 luminaire.
Energy savings: $588
Replacement lamp savings: $164
Savings based on $0.128 per kilowatt hour, average six hours use per day, 50,000 hours of lamp usage, and 130W PAR38 lamp lumen equivalent.

Energy Data						
Lumens	1400 Lumens		1900 Lumens		2400 Lumens	
Input Voltage	120V	277V	120V	277V	120V	277V
Input Current	154 (mA)	73 (mA)	222 (mA)	103 (mA)	277 (mA)	117 (mA)
Input Power	16.9 (W)		24.6 (W)		31.9 (W)	
Efficiency	81.8 (LPW)		79.1 (LPW)		74.4 (LPW)	
Inrush (A)	1.52 A @ 109 µS	1.79 A @159 µS	1.42 A @ 117 µS	1.83 A @ 137 µS	1.27 A @ 126 µS	1.78 A @ 168 µS
THD	≤ 20%					
PF	≥ 0.90					
T Ambient	-30° - +40°C					
Sound Rating	≤ 22 dba					

HLB12



- 1300lm, 1900lm or 2300lm selectable lumen
- Use to replace 130W PAR38 incandescent lamp
- 2700K, 3000K, 3500K, 4000K, 5000K CCT field select
- 90 CRI
- 17-32W; 120V-277V UNV
- L70 @ 50,000 hrs
- HALO matte white finish
- No existing recessed housing or junction box required
- Fixture will not fit into existing housings or junction boxes
- Wet location listed (shower rated) covered ceiling
- Rated for direct contact to air permeable insulation
- AIR-TITE™ certified per ASTM-E283
- Textured lens provides smooth light distribution
- Five-year limited warranty

Refer to ENERGY STAR® Certified Products List. Can be used to comply with California Title 24 High Efficacy requirements. Certified to California Appliance Efficiency Database under JA8.

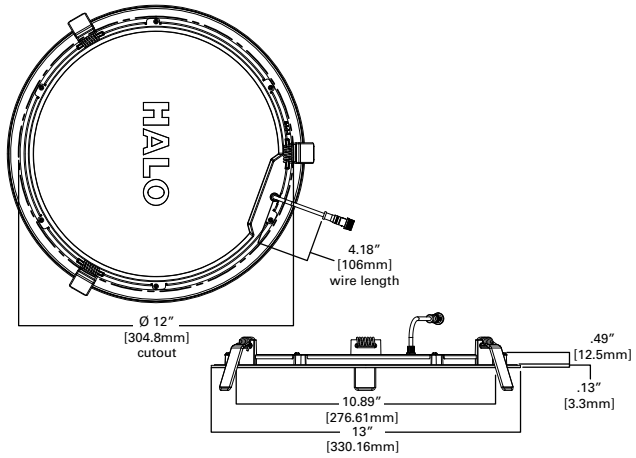

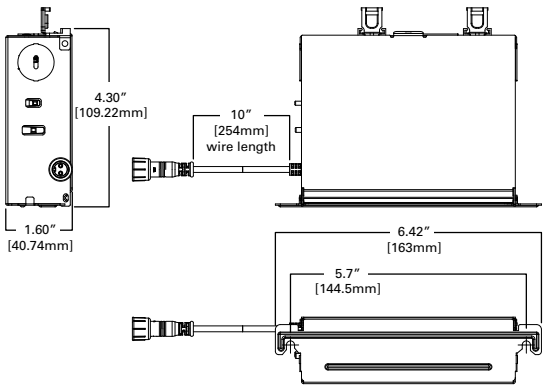

Ordering Information

SAMPLE NUMBER: HLB12LS9FSE010MWR

Models	Lumens	CRI / CCT	Driver	Finish	Packaging
HLB12 = 12-Inch LED lens downlight with remote driver / junction box	**LS** = Lumen selectable 1400, 1900, 2400 lumens (nominal)	**9FS** = 90 CRI minimum, field selectable 2700K, 3000K, 3500K, 4000K or 5000K CCT	**E010** = 120/277V 60Hz, 0-10V dimming	**MW** = matte white flange	**R** = recyclable 4-color unit carton suitable for point of purchase merchandising display

Accessories

Oversized Trim Ring
HLB12ROTMW = 12″ oversized trim, matte white

Extension Cable | SeleCCTable Driver/Jbox
HLB06FSEC - 6 ft. extension cable
HLB12FSEC - 12 ft. extension cable
HLB20FSEC - 20 ft. extension cable

UP TO $754 SAVINGS

[Δ] Savings are over the life of the HALO HLB12 luminaire.
Energy savings: $590
Replacement lamp savings: $164
Savings based on $0.128 per kilowatt hour, average six hours use per day, 50,000 hours of lamp usage, and 130W PAR38 lamp lumen equivalent.

Energy Data						
Lumens	1300 Lumens		1900 Lumens		2300 Lumens	
Input Voltage	120V	277V	120V	277V	120V	277V
Input Current	153 (mA)	72 (mA)	220 (mA)	102 (mA)	276 (mA)	115 (mA)
Input Power	16.7 (W)		24.4 (W)		31.6 (W)	
Efficiency	78.9 (LPW)		75.4 (LPW)		71.5 (LPW)	
Inrush (A)	1.58 A @ 145 µS	1.82 A @142 µS	1.51 A @ 132 µS	1.88 A @ 136 µS	1.43 A @ 153 µS	1.72 A @ 171 µS
THD	≤ 20%					
PF	≥ 0.90					
T Ambient	-30° - +40°C					
Sound Rating	≤ 22 dba					

HLA3



- Up to 700 lumens
- Use to replace 50W BR30 halogen lamp
- 2700K and 3000K fixed CCT
- 90 CRI
- 8.6W, 120V
- L70 @ 50,000 hrs
- HALO matte white finish
- No existing recessed housing or junction box required
- Fixture will not fit into existing housings or junction boxes
- Wet location listed (shower rated) covered ceiling
- Rated for direct contact to air permeable insulation
- AIR-TITE™ certified per ASTM-E283
- Five-year limited warranty

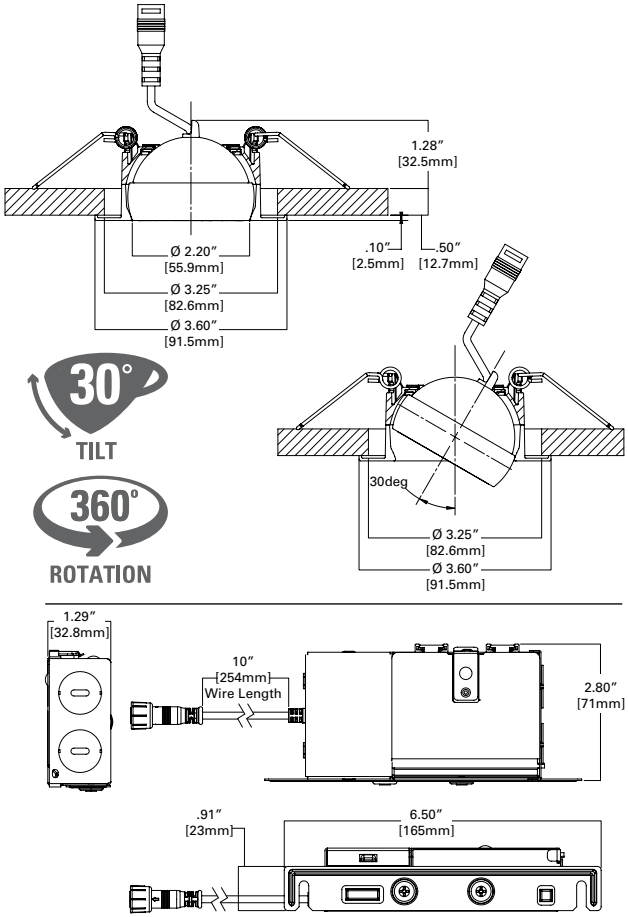

Refer to ENERGY STAR® Certified Products List. Can be used to comply with California Title 24 High Efficacy requirements. Certified to California Appliance Efficiency Database under JA8.

Ordering Information

SAMPLE NUMBER: HLA406VWFL9FS1EMWR

Models	Lumens	Distribution	CRI / CCT	Driver	Finish	Packaging
HLA3 = 3-Inch LED round directional with remote driver / junction box	**05** = 500 lumen (nominal)	**FL** = 40° flood distribution	**927** = 90 CRI minimum, 2700K CCT **930** = 90 CRI minimum, 3000K CCT	**1E** = 120V 60Hz, LE & TE phase cut 5% dimming	**MW** = matte white flange	**R** = recyclable 4-color unit carton suitable for point of purchase merchandizing display

Accessories

Oversized Trim Ring
HLB3ROTMW = 3″ round oversized trim, matte white

Decorative Trim Ring
HLB3RTRMMW = 3″ round decorative overlay, matte white
HLB3RTRMSN = 3″ round decorative overlay, satin nickel
HLB3RTRMTBZ = 3″ round decorative overlay, tuscan bronze

Extension Cables | Dedicated Driver/Jbox
HLB06EC = 6 ft. extension cable
HLB12EC = 12 ft. extension cable
HLB20EC = 20 ft. extension cable

UP TO $353[Δ] SAVINGS

[Δ] Savings are over the life of the HALO HLA3 luminaire.
Energy savings: $353
Replacement lamp savings: $1.07
Savings based on $0.128 per kilowatt hour, average six hours use per day, 50,000 hours of lamp usage, and 50W BR30 lamp lumen equivalent.

HLA3S





- Up to 700 lumens
- Use to replace 50W BR30 halogen lamp
- 2700K and 3000K fixed CCT
- 90 CRI
- 8.6W, 120V
- L70 @ 50,000 hrs
- HALO matte white finish
- No existing recessed housing or junction box required
- Fixture will not fit into existing housings or junction boxes
- Wet location listed (shower rated) covered ceiling
- Rated for direct contact to air permeable insulation
- AIR-TITE™ certified per ASTM-E283
- Five-year limited warranty

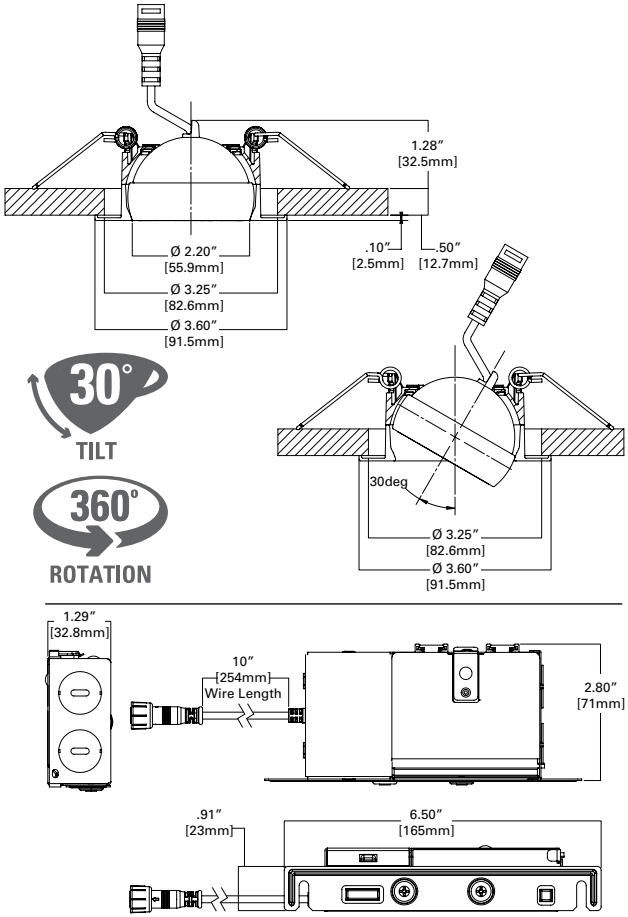



Refer to ENERGY STAR® Certified Products List. Can be used to comply with California Title 24 High Efficacy requirements. Certified to California Appliance Efficiency Database under JA8.

Ordering Information

SAMPLE NUMBER: HLA406VWFL9FS1EMWR

Models	Lumens	Distribution	CRI / CCT	Driver	Finish	Packaging
HLA3S = 3-Inch LED square directional with remote driver / junction box	**05** = 500 lumen (nominal)	**FL** = 40° flood distribution	**927** = 90 CRI minimum, 2700K CCT **930** = 90 CRI minimum, 3000K CCT	**1E** = 120V 60Hz, LE & TE phase cut 5% dimming	**MW** = matte white flange	**R** = recyclable 4-color unit carton suitable for point of purchase merchandizing display

Accessories

Oversized Trim Ring
HLB3SOTMW = 3″ round oversized trim, matte white

Decorative Trim Ring
HLB3STRMMW = 3″ square decorative overlay, matte white
HLB3STRMSN = 3″ square decorative overlay, satin nickel
HLB3STRMTBZ = 3″ square decorative overlay, tuscan bronze

Extension Cables | Dedicated Driver/Jbox
HLB06EC = 6 ft. extension cable
HLB12EC = 12 ft. extension cable
HLB20EC = 20 ft. extension cable



Δ Savings are over the life of the HALO HLA3 luminaire.
Energy savings: $353
Replacement lamp savings: $1.07
Savings based on $0.128 per kilowatt hour, average six hours use per day, 50,000 hours of lamp usage, and 50W BR30 lamp lumen equivalent.



HLA406VWFL9FS1EMWR

80° VERY WIDE FLOOD



HLA406FL9FS1EMWR

40° NARROW FLOOD

- Up to 700 lumens
- Use to replace 60W A19 incandescent lamp
- 2700K, 3000K, 3500K, 4000K, 5000K CCT field select
- 90 CRI
- 12W, 120V
- L70 @ 50,000 hrs
- HALO matte white finish
- No existing recessed housing or junction box required
- Fixture will not fit into existing housings or junction boxes
- Wet location listed (shower rated) covered ceiling
- Rated for direct contact to air permeable insulation
- AIR-TITE™ certified per ASTM-E283
- Five-year limited warranty

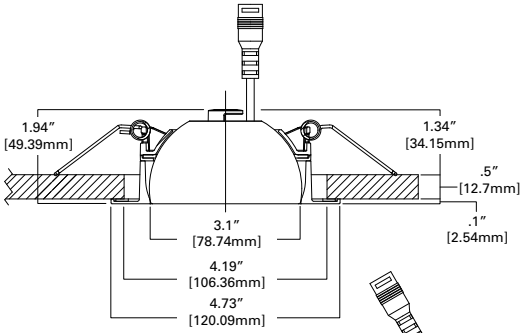

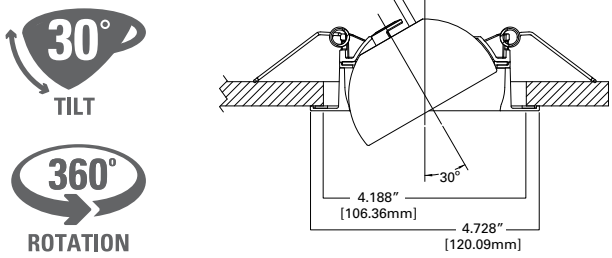

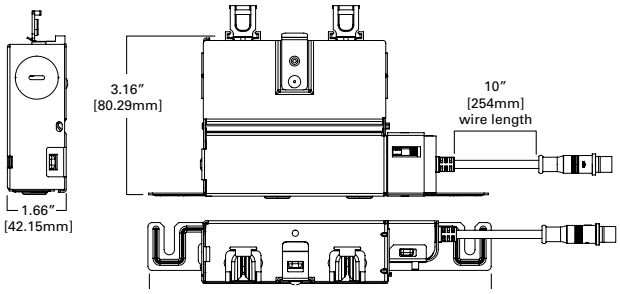

5 seleCCTable colors
2700K • 3000K • 3500K
4000K • 5000K

ENERGY STAR | Can be used for IECC International Energy Conservation Code High Efficacy Compliance | Efficiency Standards T24 Can be used to comply with 2013 Title 24 Part 6 LED Enclosed Light Source Requirements (JA8) | RoHS | Showerlight | UL CERTIFIED

Refer to ENERGY STAR® Certified Products List. Can be used to comply with California Title 24 High Efficacy requirements. Certified to California Appliance Efficiency Database under JA8.

airtight™

Ordering Information

SAMPLE NUMBER: HLA406VWFL9FS1EMWR

Models	Lumens	Distribution	CRI / CCT	Driver	Finish	Packaging
HLA4 = 4-Inch LED round directional with remote driver / junction box	**06** = 600 lumen (nominal)	**FL** = 40° flood distribution **VWFL** = 80° very wide flood distribution	**9FS** = 90 CRI minimum, field selectable 2700K, 3000K, 3500K, 4000K or 5000K CCT	**1E** = 120V 60Hz, LE & TE phase cut 5% dimming	**MW** = matte white flange	**R** = recyclable 4-color unit carton suitable for point of purchase merchandizing display

Accessories

Oversized Trim Ring
HLB4ROTMW = 4″ round oversized trim, matte white

Decorative Trim Ring
HLB4RTRMMW = 4″ round decorative overlay, matte white
HLB4RTRMSN = 4″ round decorative overlay, satin nickel
HLB4RTRMTBZ = 4″ round decorative overlay, tuscan bronze

Mounting Frame
HL4RSMF = 4″ round and square mounting frame

Extension Cable | SeleCCTable Driver/Jbox
HLB06FSEC - 6 ft. extension cable
HLB12FSEC - 12 ft. extension cable
HLB20FSEC - 20 ft. extension cable

Energy Data	
Lumens	600 Series
Input Voltage	120V
Input Current	90 (mA)
Input Power	10.5 (W)
Efficiency	60 (LPW)
Inrush (A)	1.9 A @ 54mS
THD	≤ 20%
PF	≥ 0.90
T Ambient	-30° - +40°C
Sound Rating	≤ 22dba

UP TO $377Δ SAVINGS

Δ Savings are over the life of the HALO HLA4 luminaire.
Energy savings: $327
Replacement lamp savings: $50
Savings based on $0.128 per kilowatt hour, average six hours use per day, 50,000 hours of lamp usage, and 60W A19 lamp lumen equivalent.



HLA4S06VWFL9FS1EMWR

80° VERY WIDE FLOOD



HLA4S06FL9FS1EMWR

40° NARROW FLOOD

- Up to 700 lumens
- Use to replace 60W A19 incandescent lamp
- 2700K, 3000K, 3500K, 4000K, 5000K CCT field select
- 90 CRI
- 12W, 120V
- L70 @ 50,000 hrs
- HALO matte white finish
- No existing recessed housing or junction box required
- Fixture will not fit into existing housings or junction boxes
- Wet location listed (shower rated) covered ceiling
- Rated for direct contact to air permeable insulation
- AIR-TITE™ certified per ASTM-E283
- Five-year limited warranty

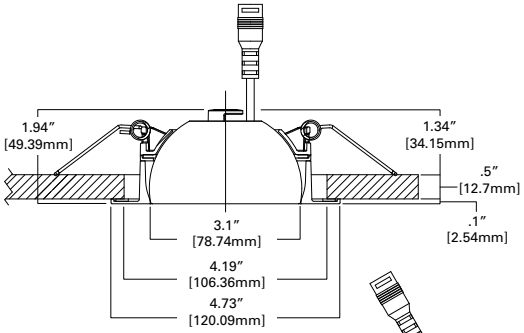

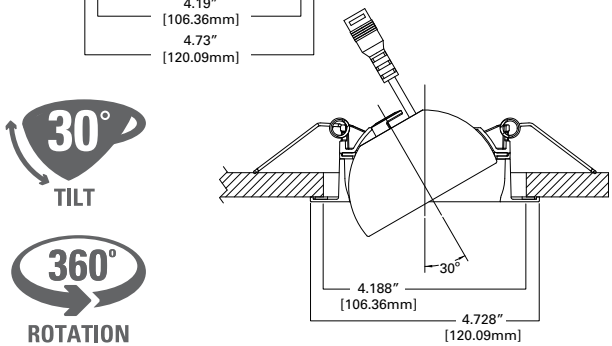

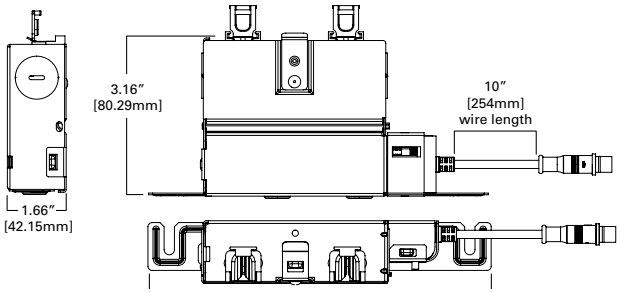

5 seleCCTable colors
2700K • 3000K • 3500K
4000K • 5000K

ENERGY STAR · Can be used for IECC International Energy Conservation Code High Efficacy Compliance · Efficiency Standards T24 Can be used to comply with 2019 Title 24 Part 6 LED Enclosed Light Source Requirements (JA8) · RoHS · Showerlight · UL CERTIFIED SAFETY

Refer to ENERGY STAR® Certified Products List. Can be used to comply with California Title 24 High Efficacy requirements. Certified to California Appliance Efficiency Database under JA8.

air tight™

Ordering Information

SAMPLE NUMBER: HLA4S06VWFL9FS1EMWR

Models	Lumens	Distribution	CRI / CCT	Driver	Finish	Packaging
HLA4S = 4-Inch LED round square directional with remote driver / junction box	**06** = 600 lumen (nominal)	**FL** = 40° flood distribution **VWFL** = 80° very wide flood distribution	**9FS** = 90 CRI minimum, field selectable 2700K, 3000K, 3500K, 4000K or 5000K CCT	**1E** = 120V 60Hz, LE & TE phase cut 5% dimming	**MW** = matte white flange	**R** = recyclable 4-color unit carton suitable for point of purchase merchandizing display

Accessories

Oversized Trim Ring
HLB4SOTMW = 4″ square oversized trim, matte white

Decorative Trim Ring
HLA4STRMMW = 4″ square decorative overlay, matte white
HLA4STRMSN = 4″ square decorative overlay, satin nickel
HLA4STRMTBZ = 4″ square decorative overlay, tuscan bronze

Mounting Frame
HL4RSMF = 4″ round and square mounting frame

Extension Cable | SeleCCTable Driver/Jbox
HLB06FSEC - 6 ft. extension cable
HLB12FSEC - 12 ft. extension cable
HLB20FSEC - 20 ft. extension cable

UP TO $377[Δ] SAVINGS

[Δ] Savings are over the life of the HALO HLA4S luminaire.
Energy savings: $327
Replacement lamp savings: $50
Savings based on $0.128 per kilowatt hour, average six hours use per day, 50,000 hours of lamp usage, and 60W A19 lamp lumen equivalent.

Energy Data	
Lumens	600 Series
Input Voltage	120V
Input Current	90 (mA)
Input Power	10.5 (W)
Efficiency	60 (LPW)
Inrush (A)	1.9 A @ 54mS
THD	≤ 20%
PF	≥ 0.90
T Ambient	-30° - +40°C
Sound Rating	≤ 22dba

Decorative Overlay



3" Round
HLB3RTRMMW = matte white
HLB3RTRMSN = satin nickel
HLB3RTRMTBZ = tuscan bronze

3" Square
HLB3STRMMW = matte white
HLB3STRMSN = satin nickel
HLB3STRMTBZ = tuscan bronze

4" Round
HLB4RTRMMW = matte white
HLB4RTRMSN = satin nickel
HLB4RTRMTBZ = tuscan bronze

4" Square
HLB4STRMMW = matte white
HLB4STRMSN = satin nickel
HLB4STRMTBZ = tuscan bronze

4" Square Adjustable
HLA4STRMMW = matte white
HLA4STRMSN = satin nickel
HLA4STRMTBZ = tuscan bronze

6" Round
HLB6RTRMMW = matte white
HLB6RTRMSN = satin nickel
HLB6RTRMTBZ = tuscan bronze

6" Square
HLB6STRMMW = matte white
HLB6STRMSN = satin nickel
HLB6STRMTBZ = tuscan bronze

Oversized Trim Plate



HLB3ROTMW - 3" round oversized trim
HLB3SOTMW - 3" square oversized trim

HLB4ROTMW - 4" round oversized trim
HLB4SOTMW - 4" square oversized trim

HLB6ROTMW - 6" round oversized trim
HLB6SOTMW - 6" square oversized trim

HLB8ROTMW - 8" round oversized trim

HLB12ROTMW - 12" round oversized trim

Extension cables



Dedicated driver / junction box
HLB06EC - 6 ft. extension cable
HLB12EC - 12 ft. extension cable
HLB20EC - 20 ft. extension cable

SeleCCTable driver / junction box
HLB06FSEC - 6 ft. extension cable
HLB12FSEC - 12 ft. extension cable
HLB20FSEC - 20 ft. extension cable

Mounting Frames

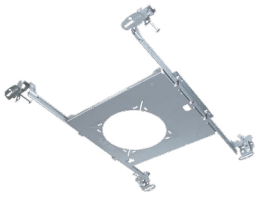

HL4RSMF - 4" round and square mounting frame

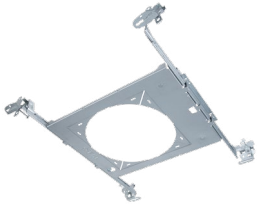

HL6RSMF - 6" round and square mounting frame



HL8RSMF - 8" round and square mounting frame

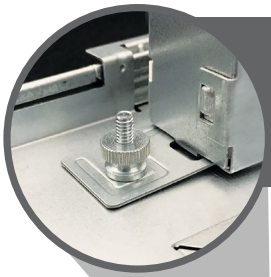

During electrical rough-in, the HLB driver / junction box attaches to the mounting frame with captive fasteners meeting code requirements for attachment to the building structure.

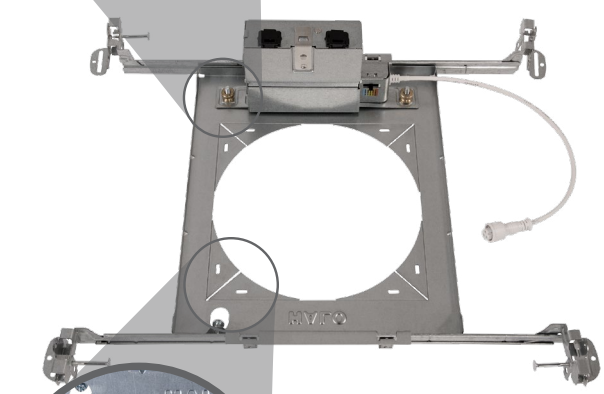



Rounded corners break away to allow installation of square fixtures.

Product and Photometric Data

HLB3059FS1EMWR

HLB3 SeleCCTable

	CCT	Lumens	Power (W)	LPW
3in HLB	2700K	573	8.5	67.4
	3000K	578	8.6	67.2
	3500K	595	8.6	69.2
	4000K	603	8.6	70.1
	5000K	607	8.6	70.6

HLB3059FS1EMW-3000K		
Luminaire lumens		578
Input watts		8.6
LER (LPW)		67.2
Spacing Criteria	0-180	1.12
	90-270	1.12
	Diagonal	1.22
Beam angle (degrees)		87.9
Field angle (degrees)		141.2
Zonal lumen	Lumens	% Lumens
0-30	164.2	28.4
0-40	268.8	46.5
0-60	464.7	80.4
0-90	578.0	100

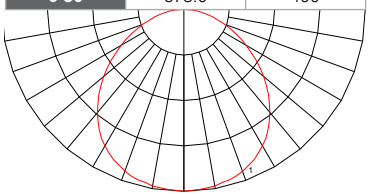

Color Metric Summary-3000K	
TM-30-15	Rf = 92
	Rg = 99
CRI/CIE	Ra = 95.2
	R9 = 73.7

CCT - Range of 2700K- 4000K

warm — cool



*Additional photometric ies files available online.

HLB3S059FS1EMWR

HLB3S SeleCCTable

	CCT	Lumens	Power (W)	LPW
3in HLBS	2700K	580	8.4	69.0
	3000K	595	8.4	70.8
	3500K	605	8.4	72.0
	4000K	618	8.4	73.6
	5000K	627	8.4	74.6

HLB3S059FS1EMW-3000K		
Luminaire lumens		595
Input watts		8.4
LER (LPW)		70.8
Spacing Criteria	0-180	1.12
	90-270	1.12
	Diagonal	1.22
Beam angle (degrees)		87.9
Field angle (degrees)		141.2
Zonal lumen	Lumens	% Lumens
0-30	166.0	27.9
0-40	273.1	45.9
0-60	476.0	80
0-90	595.0	100

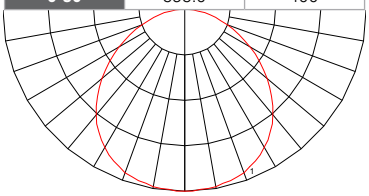

Color Metric Summary-3000K	
TM-30-15	Rf = 92
	Rg = 99
CRI/CIE	Ra = 96.1
	R9 = 78.6

CCT - Range of 2700K- 4000K

warm — cool



*Additional photometric ies files available online.



Product and Photometric Data

HLB4069FS1EMWR

HLB4 SeleCCTable

	CCT	Lumens	Power (W)	LPW
4in HLB	2700K	720.0	12	60.0
	3000K	723.0	12	60.3
	3500K	735.2	12	61.3
	4000K	746.1	12	62.2
	5000K	751.9	12	62.7

HLB4069FS1EMWR-3000K		
Luminaire lumens		723
Input watts		12
LER (LPW)		60.3
Spacing Criteria	0-180	1.28
	90-270	1.28
	Diagonal	1.39
Beam angle (degrees)		110.2
Field angle (degrees)		160
Zonal lumen	Lumens	% Lumens
0-30	203	28.1
0-40	335	46.3
0-60	581	80.4
0-90	723	100

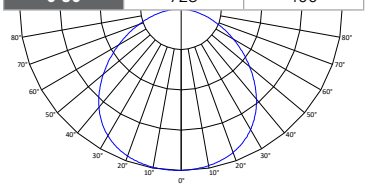

Color Metric Summary-3000K	
TM-30-15	Rf = 90.9
	Rg = 100.7
CRI/CIE	Ra = 94.1
	R9 = 68.5

CCT - Range of 2700K- 5000K

warm — cool



*Additional photometric ies files available online.

HLB4S069FS1EMWR

HLB4S SeleCCTable

	CCT	Lumens	Power (W)	LPW
4in HLBS	2700K	684.9	10.1	67.8
	3000K	695.9	10.1	68.9
	3500K	689.6	10.1	68.3
	4000K	693.7	10.1	68.7
	5000K	694.6	10.1	68.8

HLB4S069FS1EMW-3000K		
Luminaire lumens		696
Input watts		10.1
LER (LPW)		68.9
Spacing Criteria	0-180	1.30
	90-270	1.32
	Diagonal	1.40
Beam angle (degrees)		110.3
Field angle (degrees)		161.8
Zonal lumen	Lumens	% Lumens
0-30	196	28.1
0-40	321	46.1
0-60	557	80
0-90	696	100

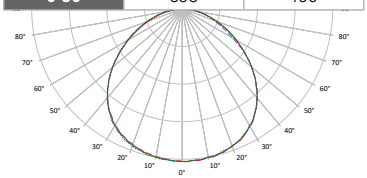

Color Metric Summary-3000K	
TM-30-15	Rf = 90.1
	Rg = 97.9
CRI/CIE	Ra = 95
	R9 = 75.8

CCT - Range of 2700K- 5000K

warm — cool



*Additional photometric ies files available online.



HLB4SP069FS1EMWR

HLB4SP SeleCCTable

	CCT	Lumens	Power (W)	LPW
4in HLBSP	2700K	638	10.2	62.6
	3000K	654	10.2	64.1
	3500K	669	10.1	66.2
	4000K	683	10.1	67.6
	5000K	704	10.1	69.7

HLB4S069FS1EMW-3000K		
Luminaire lumens		654
Input watts		10.2
LER (LPW)		64.12
Spacing Criteria	0-180	1.16
	90-270	1.18
	Diagonal	1.18
Beam angle (degrees)		82.8
Field angle (degrees)		147.1
Zonal lumen	Lumens	% Lumens
0-30	247.2	37.8
0-40	380	58.1
0-60	558.5	85.4
0-90	654	100

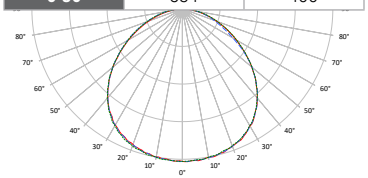

Color Metric Summary-3000K	
TM-30-15	Rf = 94
	Rg = 100
CRI/CIE	Ra = 96.2
	R9 = 82.2

CCT - Range of 2700K- 5000K

warm — cool





Product and Photometric Data

HLB6099FS1EMWR

HLB6 SeleCCTable

	CCT	Lumens	Power (W)	LPW
6in HLB	2700K	1037.3	16	64.8
	3000K	1061.0	16	66.3
	3500K	1078.9	16	67.4
	4000K	1094.9	16	68.4
	5000K	1103.4	16	69.0

HLB6099FS1EMWR-3000K		
Luminaire lumens		1061
Input watts		16
LER (LPW)		66.3
Spacing Criteria	0-180	1.31
	90-270	1.31
	Diagonal	1.41
Beam angle (degrees)		112.2
Field angle (degrees)		161.3
Zonal lumen	Lumens	% Lumens
0-30	294	27.7
0-40	486	45.8
0-60	851	80.2
0-90	1061	100

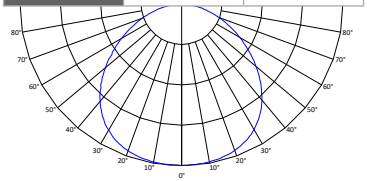

Color Metric Summary-3000K	
TM-30-15	Rf = 90.9
	Rg = 100.7
CRI/CIE	Ra = 94.1
	R9 = 68.4

CCT - Range of 2700K- 5000K

warm cool



*Additional photometric ies files available online.

HLB6S099FS1EMWR

HLB6S SeleCCTable

	CCT	Lumens	Power (W)	LPW
6in HLBS	2700K	954	13.7	69.6
	3000K	975	13.7	71.1
	3500K	1002	13.7	73.2
	4000K	1012	13.7	73.9
	5000K	1009	13.7	73.6

HLB6S099FS1EMW-3000K		
Luminaire lumens		975
Input watts		13.7
LER (LPW)		71.2
Spacing Criteria	0-180	1.22
	90-270	1.30
	Diagonal	1.38
Beam angle (degrees)		110.3
Field angle (degrees)		161.8
Zonal lumen	Lumens	% Lumens
0-30	273	28
0-40	449	46.1
0-60	782	80.2
0-90	975	100

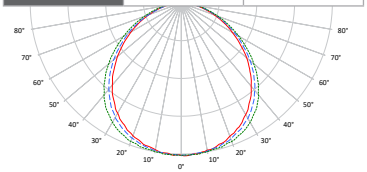

Color Metric Summary-3000K	
TM-30-15	Rf = 92.7
	Rg = 98
CRI/CIE	Ra = 94.9
	R9 = 74.9

CCT - Range of 2700K- 5000K

warm cool



*Additional photometric ies files available online.



Product and Photometric Data

HLB8169FS1EMW

HLB8 SeleCCTable

HLB8169FS1EMW-3000K		
Luminaire lumens		1761
Input watts		20.9
LER (LPW)		84.3
Spacing Criteria	0-180	1.26
	90-270	1.26
	Diagonal	1.38
Beam angle (degrees)		112
Field angle (degrees)		163
Zonal lumen	Lumens	% Lumens
0-30	474	26.8
0-40	778	43.9
0-60	1380	78
0-90	1768	99.9

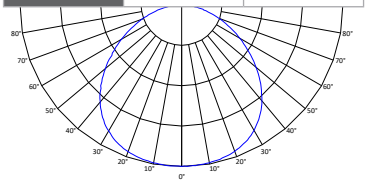

Color Metric Summary-3000K	
TM-30-15	Rf = 94
	Rg = 99
CRI/CIE	Ra = 96
	R9 = 69.9

CCT - Range of 2700K- 5000K

warm — cool



*Additional photometric ies files available online.

HLB8LS9FSE010MWR

HLB8 SeleCCTable / Lumen Select

	CCT	Lumens	Power (W)	LPW
8in HLB	2700K	1325	16.9	78.4
	3000K	1382	16.9	81.8
	3500K	1443	16.9	85.4
	4000K	1502	17	88.4
	5000K	1599	17	94.1

HLB8LS9FSE010MWR-3000K		
Luminaire lumens		2352
Input watts		31.05
LER (LPW)		75.8
Spacing Criteria	0-180	1.26
	90-270	1.26
	Diagonal	1.38
Beam angle (degrees)		113
Field angle (degrees)		165
Zonal lumen	Lumens	% Lumens
0-30	623	26.5
0-40	1020	43.4
0-60	1812	77
0-90	2349	99.9

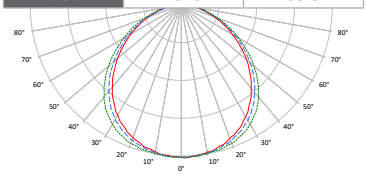

Color Metric Summary-3000K	
TM-30-15	Rf = 93
	Rg = 100
CRI/CIE	Ra = 95
	R9 = 72.9

CCT - Range of 2700K- 5000K

warm — cool



*Additional photometric ies files available online.





HLA305FL9301EMWR

HLA3 3000K

	CCT	Lumens	Power (W)	LPW
3in HLA	2700K	606.8	8.6	70.6
	3000K	631.7	8.6	73.5

HLA305FL9301EMWR-3000K		
Luminaire lumens		631
Input watts		8.6
LER (LPW)		73.37
Spacing Criteria	0-180	0.66
	90-270	0.66
	Diagonal	0.66
Beam angle (degrees)		40
Field angle (degrees)		74
Zonal lumen	Lumens	% Lumens
0-30	463.2	73.4
0-40	547.7	86.8
0-60	608.9	96.5
0-90	631.0	100

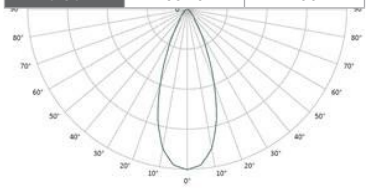

Color Metric Summary-3000K	
TM-30-15	Rf = 91
	Rg = 101
CRI/CIE	Ra = 91.7
	R9 = 62



*Additional photometric ies files available online.

HLA406FL9FS1EMWR

HLA4 SeleCCTable

	CCT	Lumens	Power (W)	LPW
4in HLA	2700K	689	10.2	67.5
	3000K	711	10.2	69.72
	3500K	730	10.2	71.58
	4000K	745	10.2	73.04
	5000K	759	10.2	74.39

HLA406FL9FS1EMWR-3000K		
Luminaire lumens		711
Input watts		10.2
LER (LPW)		69.71
Spacing Criteria	0-180	0.66
	90-270	0.66
	Diagonal	0.64
Beam angle (degrees)		39.4
Field angle (degrees)		69.3
Zonal lumen	Lumens	% Lumens
0-30	546.8	76.9
0-40	625.7	88
0-60	685.4	96.4
0-90	711	100

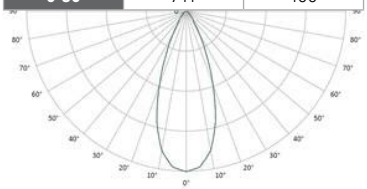

Color Metric Summary-3000K	
TM-30-15	Rf = 90
	Rg = 100
CRI/CIE	Ra = 92
	R9 = 59

CCT - Range of 2700K- 5000K

warm — cool



*Additional photometric ies files available online.

HLA406VWFL9FS1EMWR

HLA4 SeleCCTable

	CCT	Lumens	Power (W)	LPW
4in HLA	2700K	704	10.1	69.7
	3000K	670	10.1	66.4
	3500K	673	10.1	66.6
	4000K	671	10.1	66.4
	5000K	656	10.1	65.0

HLA406VWFL9FS1EMWR-3000K		
Luminaire lumens		670
Input watts		10.1
LER (LPW)		66.34
Spacing Criteria	0-180	1.18
	90-270	1.18
	Diagonal	1.28
Beam angle (degrees)		96.6
Field angle (degrees)		156.7
Zonal lumen	Lumens	% Lumens
0-30	238.1	35.53
0-40	361.4	53.94
0-60	569.8	85.04
0-90	670.0	100

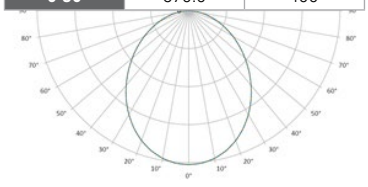

Color Metric Summary-3000K	
TM-30-15	Rf = 90
	Rg = 100
CRI/CIE	Ra = 94.7
	R9 = 69

CCT - Range of 2700K- 5000K

warm — cool



*Additional photometric ies files available online.

Lighting Control Solution

HALOHOME™



HALO Home In-wall Smart Dimmer

HIWMA1BLE40AWH

Controls standard lighting fixtures with dimmer or HALO Home mobile app. Features include:

- ON/OFF
- Dim
- Group
- Scene
- Schedule

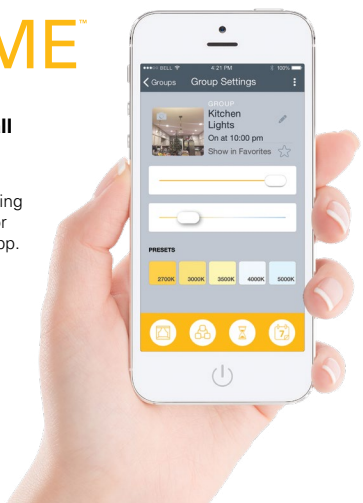



Cooper Lighting Solutions
1121 Highway 74 South
Peachtree City, GA 30269
P: 770-486-4800
www.halolighting.com

Canada Sales
5925 McLaughlin Road
Mississauga, Ontario L5R 1B8
P: 905-501-3000
F: 905-501-3172

Our Lighting Product Lines
Ametrix
AtLite
Corelite
Ephesus
Fail-Safe
HALO
HALO Commercial
Invue
io
IRiS
Lumark
Lumière
McGraw-Edison
Metalux
MWS
Neo-Ray
Portfolio
RSA
Shaper
Streetworks
Sure-Lites

Our Controls Product Lines
Fifth Light Technology
Greengate
iLight (International Only)
iLumin
Zero 88

Connected Lighting Systems
Distributed Low-Voltage Power
HALO Home
iLumin Plus
Enlighted
WaveLinx
Trellix

© 2020 Cooper Lighting Solutions
All Rights Reserved
Printed in USA
Publication No. BR518100EN
September 2020

Products, specifications and compliances are subject to change without notice.

Cooper Lighting Solutions is a registered trademark.
All other trademarks are property of their respective owners.

COOPER Lighting Solutions