HC6

6-inch LED Downlight & Wall Wash

HALO Commercial

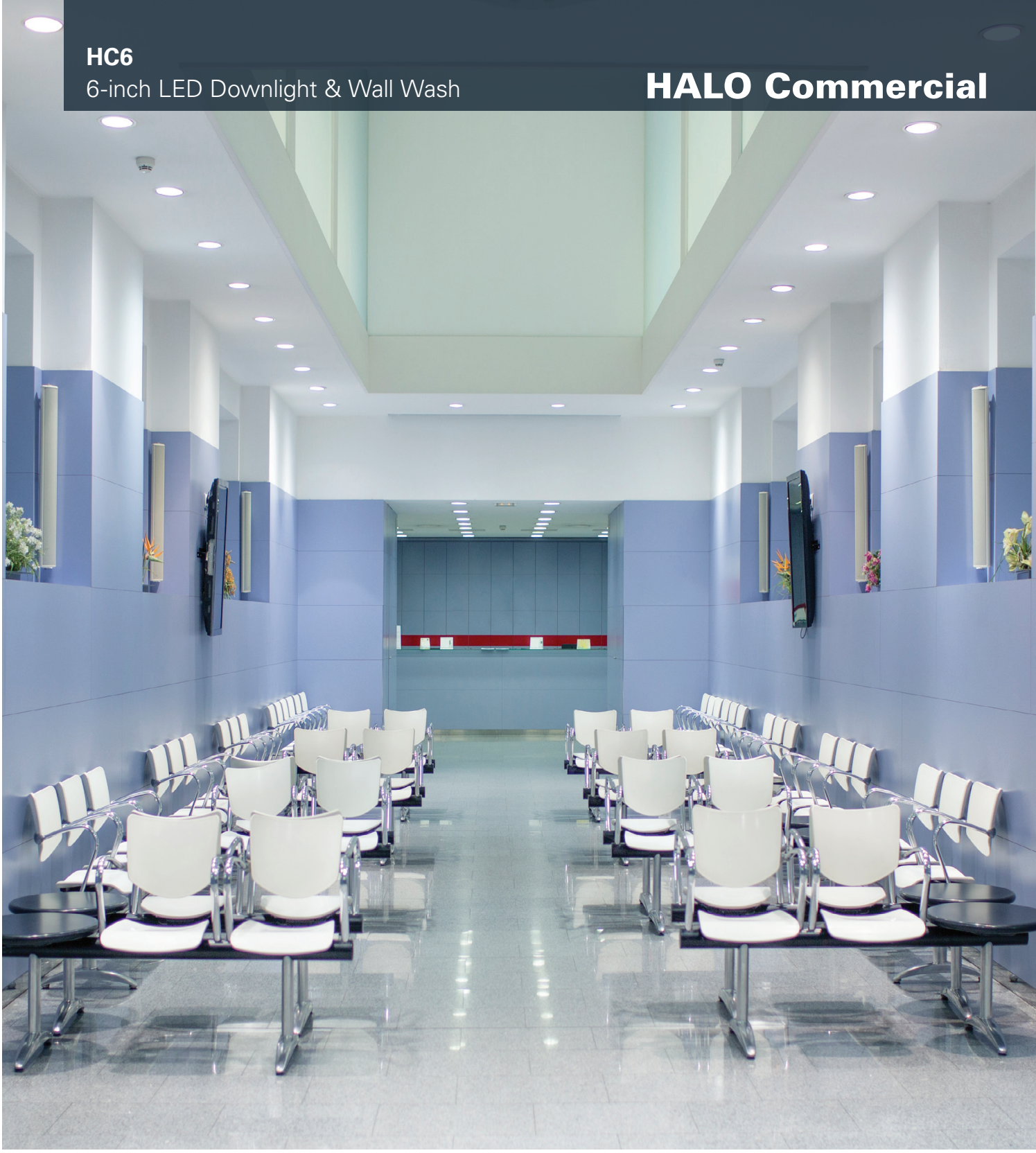

Powering Business Worldwide

HC6

6-inch LED Downlight and Wall Wash

Versatile 6-inch commercial downlight optimized for lumen efficiency and optical performance. Reflectors offered in narrow, medium, wide distribution for efficiency in lumen delivery. Value priced and contractor installation friendly with emergency and connected lighting options available.

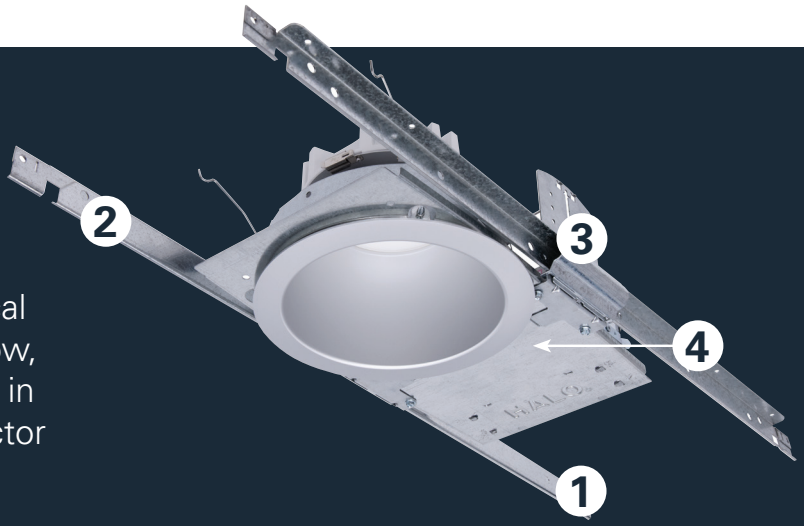

Standard Features

1. Housing Mounting Frame

a. 6" Boat-shaped galvanized steel frames with die-formed aperture
b. New construction or remodeling installation with boat shaped frame
c. Plaster lip collar pre-set to 1/2" and adjusts for ceilings up to 1-1/2" thick

2. No Fuss Bar Hangers

a. Pre-installed and centered mounting bars
b. Bars lock to tee grid with screwdriver or pliers
c. Centering marks on the bar bracket

3. Adjustable Mounting Brackets

a. Bar brackets adjust 2" vertically from above the ceiling or through the aperture
b. Brackets for use with the included "No Fuss" mounting bars or with 1/2" EMT
c. Brackets are removable for remodel installation from below the ceiling

4. Junction Box

a. Listed for (8) #12 AWG 90° C conductors (4-in/4-out)
b. Listed for feed through branch wiring
c. (3) 1/2" and (2) 3/4" trade size pry-outs
d. Low voltage barrier section for 0-10V dimming wires
e. (3) 4-port push wire nuts (1-port is fixture connection)

LED Modules



HM6 Low Lumen LED Module

For 1000, 1500, and 2000 lumen housings (mounting frames)



HM6 High Lumen LED Module

For 3000 and 4000 lumen housings (mounting frames)

The HC6 LED modules are available in a discrete selection of correlated color temperatures (CCT). The user can choose color temperatures 2700K, 3000K, 3500K and 4000K in 80 or 90 CRI.

Color temperature options

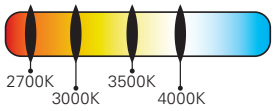

Lumen options

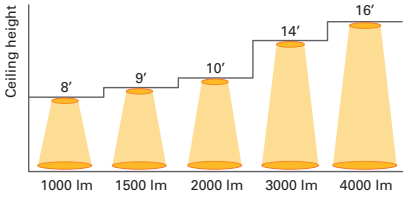

Nominal values for 15 - 20 footcandles at nadir.

Reflectors



Specular Clear



Semi-Specular (Haze)



Black Baffle



White Baffle



White



Wall Wash



White Polymer (Dead Front)

Nominal beam distribution options*



narrow 55°

medium 60°

wide 65°

Beam Distribution*			
Code	Distribution	Spacing Criteria	Beam Angle
ND	Narrow	0.97	55°
MD	Medium	1.10	60°
WD	Wide	1.28	65°

* *Nominal values may vary depending on selected CRI/CCT and reflector finish.*

HALO Commercial

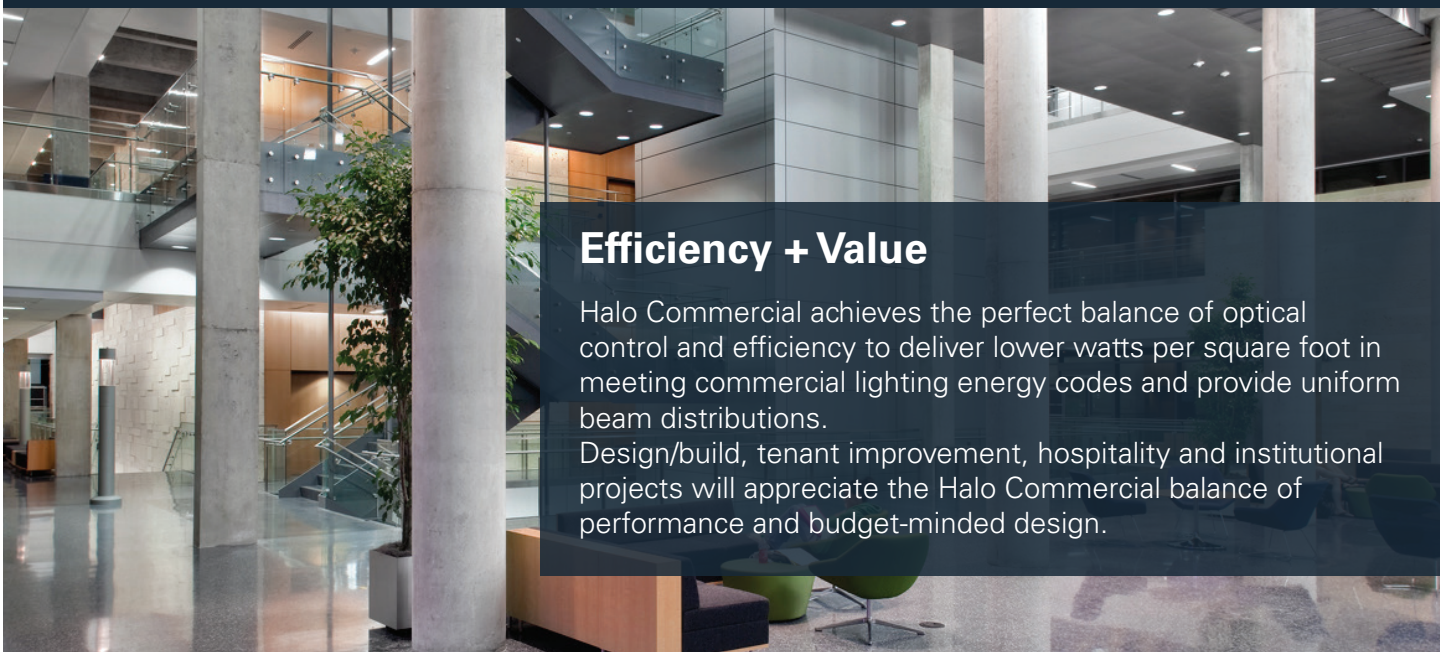

Efficiency + Value

Halo Commercial achieves the perfect balance of optical control and efficiency to deliver lower watts per square foot in meeting commercial lighting energy codes and provide uniform beam distributions.
Design/build, tenant improvement, hospitality and institutional projects will appreciate the Halo Commercial balance of performance and budget-minded design.

HALO Commercial Features & Benefits

Contractor and Distributor Friendly

- Housings ship complete with No-Fuss bar hangers (no additional bars or C-channel to assemble)
- No-Fuss bars lock to T-grid by quick bend of a screwdriver or pliers (no screws to secure to grid)
- Boat-shaped plaster frame offers versatility in new construction and "old-work" remodeling
- Oversized junction box with 1/2" and 3/4" trade size pry-outs ships with quick wiring connectors
- Junction box low voltage section provides code-required barrier for 0-10V dimmer wiring
- Plaster lip collar is preset for 1/2" ceiling material, and adjusts up to 1-1/2"

Performance and Efficiency

- Reflector designs optimized for greater optical efficiency (lumen delivery) and beam distribution
- Greater efficiency allows maximized fixture spacing with good uniformity
- Maximized spacing achieves desired watts per square foot (fewer fixtures = less power)
- Control from industry standard 120V-277V, 0-10V 1% dimmable LED driver
- Optional connected lighting control with Distributed Low Voltage Power system (DLVP), WaveLinx, and LumaWatt Pro
- Optional emergency battery backup with remote or integral test switch

Product Mix

- Mainstream offering meets market demand in 4-inch, 6-inch, and 8-inch downlights
- PR series offers contractors versatility of lumen and LED color select-ability on-site
- HC series offers discrete selection of lumen and LED color for design/build and tenant improvement projects



6” HC6 LED Downlight & Wall Wash

6-inch aperture LED downlight offered in narrow, medium, wide, and wall wash distributions ideal for general area lighting. Lumen options range from 1000 to 4000 lumens in color temperatures of 2700K, 3000K, 3500K, and 4000K; in 80 or 90CRI. Luminaire is airtight and can be installed in new construction or below the finished ceiling in remodeling applications. Intended for office spaces, healthcare, hospitality, and institutional uses.

Sample Number: HC620D010REM7 - HM612835 - 61MDC
A complete luminaire consists of a mounting frame, LED module, and reflector (order separately)

Mounting Frame	Lumens	Driver	Options
HC6 = 6” new construction and remodeler frame **HC6CP** = 6” Chicago Plenum new construction and remodeler frame	**Fixed, Factory Set** **10** = 1000 lumens (nominal), use with HM612 module **15** = 1500 lumens (nominal), use with HM612 module **20** = 2000 lumens (nominal), use with HM612 module **30** = 3000 lumens (nominal), use with HM634 module **40** = 4000 lumens (nominal), use with HM634 module	**D010**=120-277VAC, 50/60Hz, 0-10V 1% -100% dimming	**REM7**=7 watt emergency battery with remote indicator & test switch[1] **REM14**=14 watt emergency battery with remote indicator & test switch[1] **IEM7**=Integral Emergency battery w/ integral indicator & test switch (D010 only)[1] **IEM14**=Integral Emergency battery w/ integral indicator & test switch (D010 only)[1] **LWTPD1**=Factory installed LumaWatt Pro tile mount sensor kit (D010 only)[1] **SWPD1**=WaveLinx tile mount sensor kit (D010 only)[1]
		DLV=distributed low voltage dimming (1%-100%) driver[1] For use with Eaton’s DLVP system only. Refer to DLVP system specifications for details.	**REMV7**=7W LV EM w/ remote test (DLV only)[1, 2] **REMV14**=14W LV EM w/ remote test (DLV only)[1, 2] **IEMV7**=7W Integral EM w/ integral test (DLV only)[1, 2] **IEMV14**=14W Integral EM w/ integral test (DLV only)[1, 2]

Notes: 1. Not available in Chicago Plenum. **2.** ULus for U.S. only.

LED Module	Lumens	CRI/CCT	
HM6 = 6” LED module Use with 61 & 61PS series reflectors. Compatible with HC6 frames only.	**12**=1000, 1500, 2000 lumens (nominal). For use with HC610*, HC615*, HC620* frames. **34**=3000, 4000 lumens (nominal). For use with HC630* and HC640* frames.	**827**=80CRI / 2700K **830**=80CRI / 3000K **835**=80CRI / 3500K **840**=80CRI / 4000K	**927**=90CRI / 2700K **930**=90CRI / 3000K **935**=90CRI / 3500K **940**=90CRI / 4000K

Dimensions - HC6 Series

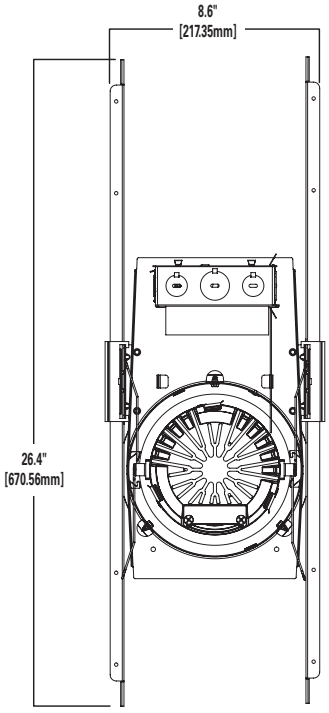

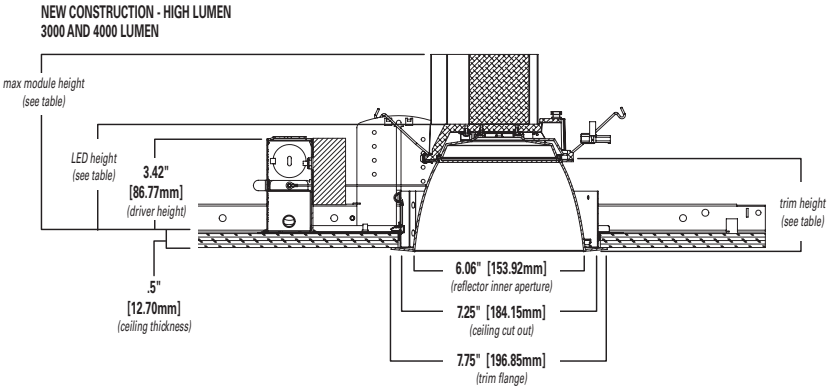

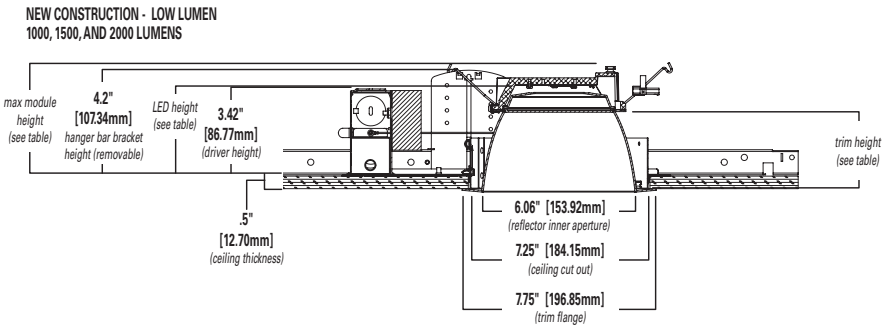





Precision formed 6-inch reflectors designed to deliver narrow, medium and wide beam distributions. A non-conductive polymer reflector may be used to meet 'dead-front' requirements.

Reflector	Beam Distribution[3]	Finish	Flange	Accessories
61 = 6" conical reflector	**ND** = narrow 55° beam angle, 0.97 SC **MD** = medium 60° beam angle, 1.10 SC **WD** = wide 65° beam angle, 1.28 SC **RWW** = rotatable wall wash with linear spread lens	**C** = Specular clear **H** = Semi-specular clear (haze) **W** = Matte white (white flange)	**Blank** = Polished flange standard, C, H reflectors **Blank** = White flange standard, W reflectors **WF** = White flange option for C & H reflectors	**61RWWPK** = rotatable wall wash insert for 6" reflector, replacement part kit

Baffle	Beam Distribution[3]	Finish	Flange	Accessories
61 = 6" baffle reflector	**WD** = wide 65° beam angle, 1.28 SC (nominal) **RWW** = rotatable wall wash with linear spread lens	**BB**=black baffle (white flange) **WB**=white baffle (white flange)	**Blank** = White flange standard, BB & WB	**61RWWPK** = rotatable wall wash insert for 6" reflector, replacement part kit

IEM Reflector	Beam Distribution[3]	Finish	Flange	Integral Emergency
61 = 6" IEM reflector for integral emergency only	**ND** = narrow 55° beam angle, 0.97 SC **MD** = medium 60° beam angle, 1.10 SC **WD** = wide 65° beam angle, 1.28 SC	**C** = Specular clear **H** = Semi-specular clear (haze) **W** = Matte white (white flange)	**Blank** = Polished flange standard, C, H reflectors **Blank** = White flange standard, W reflectors **WF** = White flange option for C & H reflectors	**IEM** = Reflector for integral emergency only

IEM Baffle	Beam Distribution[3]	Finish	Flange	Integral Emergency
61 = 6" IEM baffle for integral emergency only	**WD** = wide 65° beam angle, 1.28 SC (nominal)	**BB**=black baffle (white flange) **WB**=white baffle (white flange)	**Blank** = White flange standard, BB & WB	**IEM** = Reflector for integral emergency only

Reflector	Beam Distribution[3]	Finish	Flange
61PS = 6" non-conductive polymer 'dead-front' conical reflector[4]	**MD** = medium 60° beam angle, 1.10 SC (nominal)	**W** = Matte white (white flange)	**Blank** = White flange on W reflector

3. Values are nominal with specular clear reflector, other finishes and field results may vary. **4.** 61PS reflector only available in Non-IC environments only, and up to 3000 lumens only.

Energy Data - HC6 Series

Nominal Lumens Model Number	1000 lumen HC610		1500 lumen HC615		2000 lumen HC620		3000 lumen HC630		4000 lumen HC640	
LED Module	Low Lumen Module		Low Lumen Module		Low Lumen Module		High Lumen Module		High Lumen Module	
Input Voltage 120-277VAC	120V	277V	120V	277V	120V	277V	120V	277V	120V	277V
Current (A)	0.085	0.042	0.119	0.055	0.176	0.082	0.228	0.102	0.345	0.15
Power (W)	10.1	10.9	14.2	14.9	21.1	21.4	27.2	27	41.3	40.7
In-rush (A)	0.644	1.95	0.212	0.85	0.588	0.624	0.898	1.7	1.05	2.23
In-rush Duration (ms)	0.125	0.24	0.28	0.32	0.3	0.38	0.36	0.38	0.32	0.34
THD (%)	8.6	15.6	7.8	16.3	8.8	11.2	9.7	9.3	10.06	14.01
PF ≥	≥ 0.90									
Minimum starting temperature	-40 C (-40 F)									

High Lumen (3000 & 4000 Lumens)

Distribution	Max. Module Height	Trim Height	LED Height
Narrow	6.6"	3.4"	3.8"
Medium	6.7"	3.5"	3.9"
Wide	6.5"	3.3"	3.7"
Baffle	6.5"	3.3"	3.7"

Low Lumen (1000, 1500 & 2000 Lumens)*

Max. Module Height	Trim Height	LED Height
4.5"	3.4"	3.8"
4.6"	3.5"	3.9"
4.4"	3.3"	3.7"
4.4"	3.3"	3.7"

*Max. height w/hanger bar bracket 4.2"

6” HC6R LED Retrofit Downlight

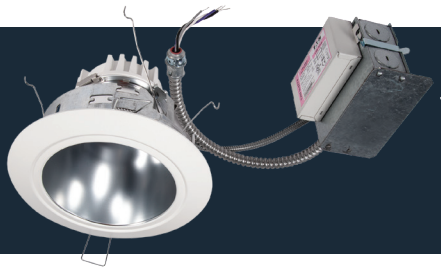

6-inch aperture LED retrofit downlight is designed for installation into other **6.625” (6-5/8”) to 7.0” (7”)** nominal aperture commercial housings. The retrofit reflector offered in medium distribution is ideal for general area lighting. Lumen packages range 1000 to 4000 lumens (nominal) in color temperatures of 2700K, 3000K, 3500K, and 4000K; in 80 or 90CRI. Installs from below the ceiling into existing open frame recessed housings. Applications include office spaces, healthcare, hospitality, and other institutional uses.

Sample Number: HC6R20D010 – HM6R12835 – 62RMDC
A complete luminaire consists of a mounting frame, LED module, and reflector (order separately)

Mounting Frame	Lumens	Driver	Options
HC6R = 6” retrofit kit for 6.625” (6-5/8”) to 7.0” (7”) nominal ceiling cutout aperture existing open frame commercial housings	**Fixed, Factory Set** **10** = 1000 lumens (nominal), use with HM412 module **15** = 1500 lumens (nominal), use with HM412 module **20** = 2000 lumens (nominal), use with HM412 module **30** = 3000 lumens (nominal), use with HM434 module **40** = 4000 lumens (nominal), use with HM434 module	**D010**=120-277VAC, 50/60Hz, 0-10V 1% -100% dimming	**REM7**=7 watt emergency battery with remote indicator & test switch **REM14**=14 watt emergency battery with remote indicator & test switch **LWTPD1**=Factory installed LumaWatt Pro tile mount sensor kit (D010 only) **SWPD1**=WaveLinx tile mount sensor kit (D010 only)

LED Module	Lumens	CRI/CCT	
HM6R = 6” retrofit module for use for use HC6R and HC56R series retrofit kits and 62R trims only	**12**=1000, 1500, 2000 lumens (nominal) Use with HC6R10*, HC6R15*, HC6R20*, HC56R10*, HC56R15*, HC56R20* mounting frames, and 62R trims only **34**=3000, 4000 (nominal) For use with HC6R30*, HC6R40*, HC56R30*, HC56R40* mounting frames, and 62R trims only	**827**=80CRI / 2700K **830**=80CRI / 3000K **835**=80CRI / 3500K **840**=80CRI / 4000K	**927**=90CRI / 2700K **930**=90CRI / 3000K **935**=90CRI / 3500K **940**=90CRI / 4000K

Reflector	Beam Distribution	Finish	Flange
62R = 6” retrofit conical reflector for use HC6R and HC56R series retrofit kits only	**MD** = medium 55° beam angle, 1.04 SC	**C** = Specular clear **H** = Semi-specular clear (haze) **W** = Matte white (white flange)	**Blank** = Polished flange on C, H reflectors **Blank** = White flange on W reflectors **WF** = White flange option for C & H reflectors

Retrofit Reflectors



Specular Clear



Semi-Specular (Haze)



Matte White



Specular Clear with White Flange



Semi-Specular (Haze) with White Flange

Dimensions - HC6R Series

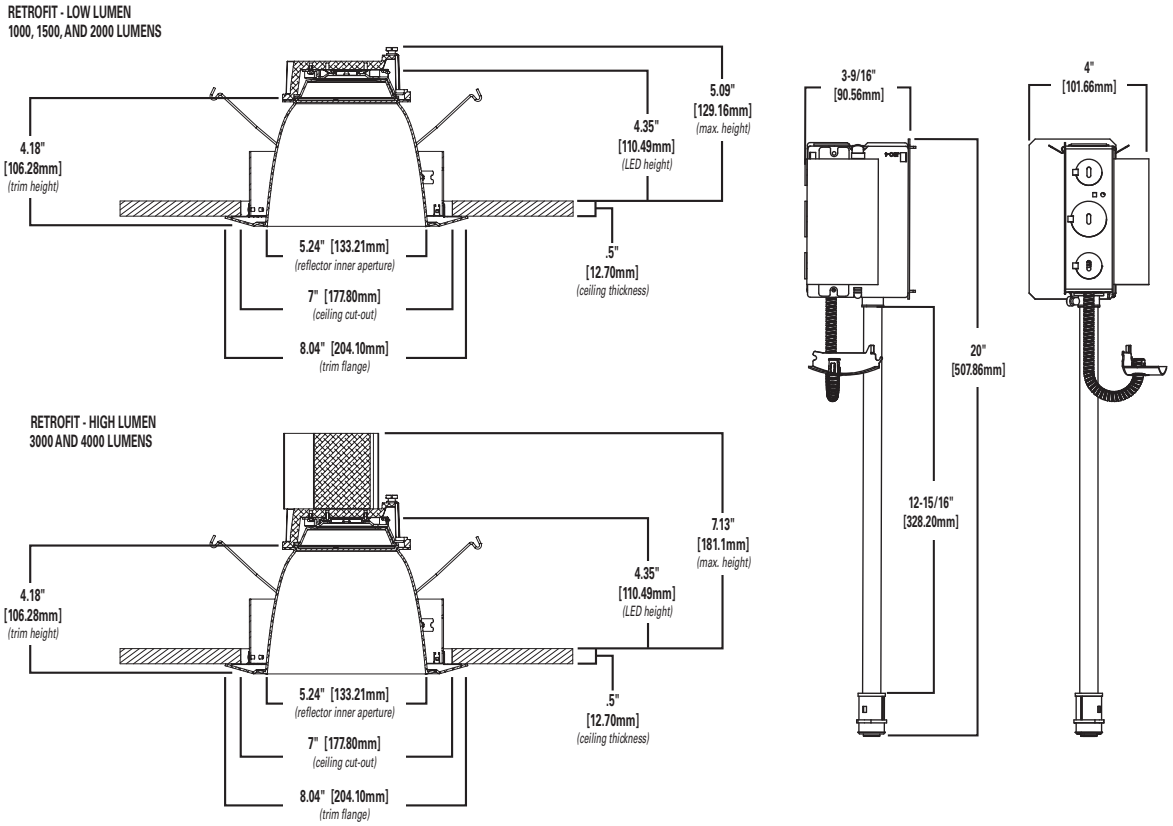

6” HC56R LED Retrofit Downlight

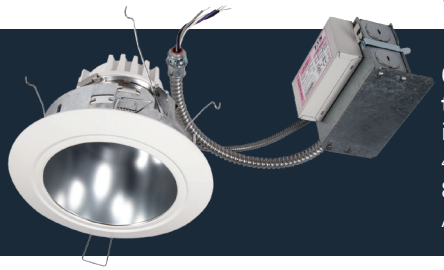

6-inch aperture LED retrofit downlight is designed for installation into other **5.875” (5-7/8”) to 6.625” (6-5/8”)** nominal aperture commercial housings. The retrofit reflector offered in medium distribution is ideal for general area lighting. Lumen packages range 1000 to 4000 lumens (nominal) in color temperatures of 2700K, 3000K, 3500K, and 4000K; in 80 or 90CRI. Installs from below the ceiling into existing open frame recessed housings. Applications include office spaces, healthcare, hospitality, and other institutional uses.

Sample Number: HC6R20D010 – HM6R12835 – 62RMDC
A complete luminaire consists of a mounting frame, LED module, and reflector (order separately)

Mounting Frame	Lumens	Driver	Options
HC56R = 6” retrofit kit for 5.875” (5-7/8”) to 6.625” (6-5/8”) nominal ceiling cutout aperture existing open frame commercial housings	**Fixed, Factory Set** **10** = 1000 lumens (nominal), use with HM412 module **15** = 1500 lumens (nominal), use with HM412 module **20** = 2000 lumens (nominal), use with HM412 module **30** = 3000 lumens (nominal), use with HM434 module **40** = 4000 lumens (nominal), use with HM434 module	**D010**=120-277VAC, 50/60Hz, 0-10V 1% -100% dimming	**REM7**=7 watt emergency battery with remote indicator & test switch **REM14**=14 watt emergency battery with remote indicator & test switch **LWTPD1**=Factory installed LumaWatt Pro tile mount sensor kit (D010 only) **SWPD1**=WaveLinx tile mount sensor kit (D010 only)

LED Module	Lumens	CRI/CCT	
HM6R = 6” retrofit module for use for use HC6R and HC56R series retrofit kits and 62R trims only	**12**=1000, 1500, 2000 lumens (nominal) Use with HC56R10*, HC56R15*, HC56R20*, HC6R10*, HC6R15*, HC6R20* mounting frames, and 62R trims only **34**=3000, 4000 (nominal) For use with HC56R30*, HC56R40*, HC6R30*, HC6R40* mounting frames, and 62R trims only	**827**=80CRI / 2700K **830**=80CRI / 3000K **835**=80CRI / 3500K **840**=80CRI / 4000K	**927**=90CRI / 2700K **930**=90CRI / 3000K **935**=90CRI / 3500K **940**=90CRI / 4000K

Reflector	Beam Distribution	Finish	Flange
62R = 6” retrofit conical reflector for use HC6R and HC56R series retrofit kits only	**MD** = medium 55° beam angle, 1.04 SC	**C** = Specular clear **H** = Semi-specular clear (haze) **W** = Matte white (white flange)	**Blank** = Polished flange on C, H reflectors **Blank** = White flange on W reflectors **WF** = White flange option for C & H reflectors

Retrofit Reflectors



Specular Clear



Semi-Specular (Haze)



Matte White



Specular Clear with White Flange



Semi-Specular (Haze) with White Flange

Dimensions - HC56R Series

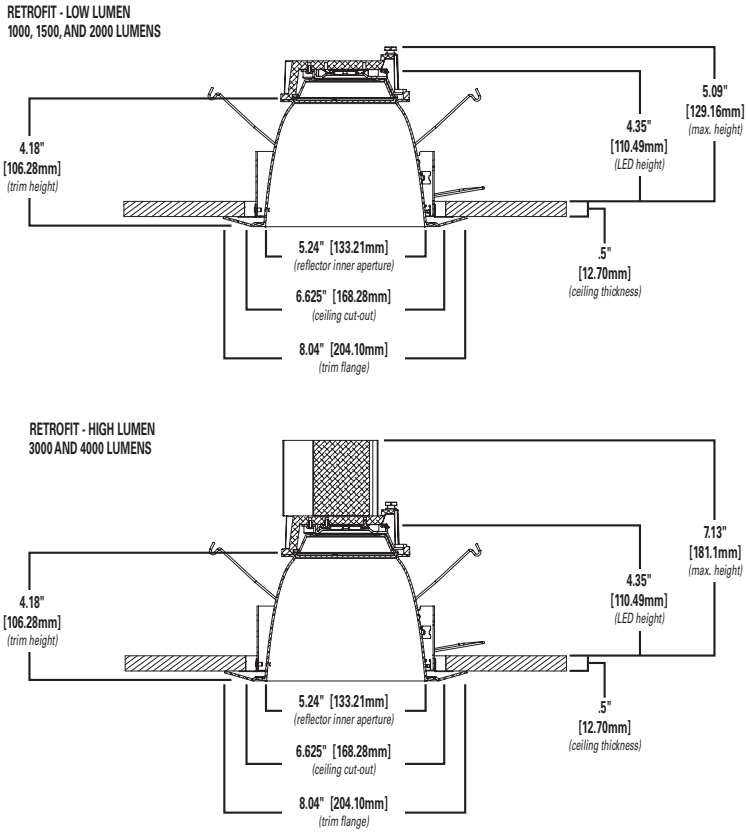

Our Lighting Product Lines

Ametrix
AtLite
Corelite
Ephesus
Fail-Safe
HALO
HALO Commercial
Invue
io
IRiS
Lumark
Lumière
McGraw-Edison
Metalux
MWS
Neo-Ray
Portfolio
RSA
Shaper
Streetworks
Sure-Lites

Our Controls Product Lines

Fifth Light Technology
Greengate
iLight (International Only)
iLumin
Zero 88

Connected Lighting Systems

Distributed Low-Voltage Power
HALO Home
iLumen Plus
LumaWatt Pro
WaveLinx

Powering Business Worldwide

Eaton
1121 Highway 74 South
Peachtree City, GA 30269
P: 770-486-4800
www.eaton.com/lighting

Canada Sales
5925 McLaughlin Road
Mississauga, Ontario L5R 1B8
P: 905-501-3000
F: 905-501-3172

© 2019 Eaton
All Rights Reserved
Printed in USA
Publication No. BR518064EN
June 3, 2019 5:49 PM

Eaton is a registered trademark.

All other trademarks are property of their respective owners.

Product availability, specifications, and compliances are subject to change without notice.