HALO OUTDOOR™

DESCRIPTION

The HALO entry light provides dependable security lighting with nighttime ON and daytime OFF funtionality. Suitable for mounting heights up to 10ft, these fixtures are ideal for residential applications such as entrances, patios and walkways. Produces light output equivalent to 75W incandescent, available in white or bronze finish.

Catalog #		Type
Project		
Comments		Date
Prepared by		

SPECIFICATION FEATURES

Construction

- Corrosion resistant polycarbonate housing
- UV stable frosted polycarbonate lens
- Available in bronze or white finish
- Suitable for recessed junction boxes

Electrical

- Maintenance-free LEDs with 25,000 hours of life
- Fixture operating temperature range from -30°C to 40°C
- Integral photo control included
- Electrical operating voltage 120VAC 60Hz
- cULus listed for wet locations
- External supply wiring 75°C minimum

Optics

- Diffused lens
- 5000K CCT

Warranty

5 year limited warranty



FE0650
LED ENTRY LIGHT

DIMENSIONS

FE0650LPC

Front View

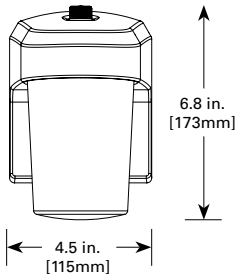

Side View

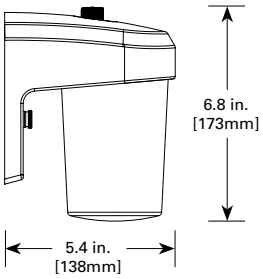

ORDERING INFORMATION

Model	Finish
FE0650LPC	Bronze
FE0650LPCW	White

CERTIFICATION DATA
cULus Wet Location Listed

TECHNICAL DATA
-30°C to 40°C Temperature Rating
External Supply Wiring 75° Minimum
Wall and Pole Mount

COOPER Lighting Solutions

Cooper Lighting Solutions
1121 Highway 74 South
Peachtree City, GA 30269
P: 770.486.4800
www.cooperlighting.com

Specifications and dimensions subject to change without notice.

PS502091EN
January 14, 2019

PHOTOMETRICS

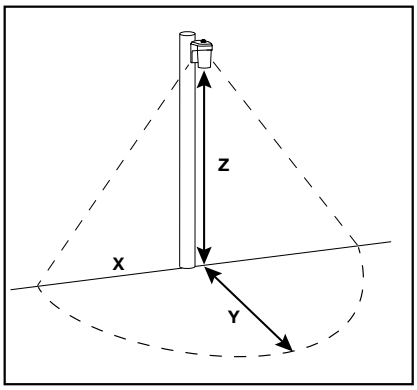

	0.25 Fc Coverage Area					
Mounting Height	8		10		15	
Catalog Number	X	Y	X	Y	X	Y
FE0650 Series	13	24	13	24	8.5	17

X = Forward Throw
Y = Wall Spread
Z = Mounting Heights

Technical Information

		Voltage (V)	Power (W)	Delivered Lumens	Efficacy (Lum/Watt)	LED Color Temperature (K)	CRI
FE0650 Series	Bronze	120	9	811	91	5000	83
	White	120	9	927	104	5000	83

Cooper Lighting Solutions
1121 Highway 74 South
Peachtree City, GA 30269
P: 770.486.4800
www.cooperlighting.com

Specifications and dimensions subject to change without notice.