COOPER LIGHTING SOLUTIONS - METALUX®

DESCRIPTION

The VT4 Series is an energy efficient industrial Vaportite fixture that features rugged and durable construction. The VT4 incorporates a full metal tray inside a reinforced fiberglass housing with a high impact diffuser. This Vaportite series is suitable for interior and exterior applications and can be surface, chain or cable mounted.

The VT4 Series has been designed for maximum operation in commercial institutional and industrial environments where weathering, high temperature, humidity and dust or corrosive fumes are present.

Catalog #		**Type**
Project		
Comments		**Date**
Prepared by		

SPECIFICATION FEATURES

Construction
Fiberglass reinforced polyester housing is UL94 and UL746 5VA flammability rated. Rounded housing allows for easy cleaning during high pressure hose down. Watertite hubs for 1/2" conduit entry is provided at each end of housing (standard) for continuous feed. Continuous closed cell gasketing is formed inside the housing ledge, providing a continuous seamless seal for the diffuser. Stainless steel cam latches hold diffuser tightly for a positive seal between housing, gasketing and diffuser.

Electrical*
Unit has full hinged metal gear tray secured by internal latches for tooless ballast access. Rotor lock lampholders. CBM/ETL Class "P" certified to 90°C. Electrical components and fixtures are UL/cUL listed for Wet Locations. NEMA 4X, IP65 and IP67 rated, up to 1500 PSI hosedown. NSF certified.

Optics
Available internal specular aluminum reflector.

Shielding
High impact, clear acrylic (standard), or optional 100% polycarbonate lens diffuser.

Mounting
Suspended using two stainless steel mounting bails (included). Optional Y-hook, Y-cable or surface mount is also available. Mounting hardware must be ordered separately.

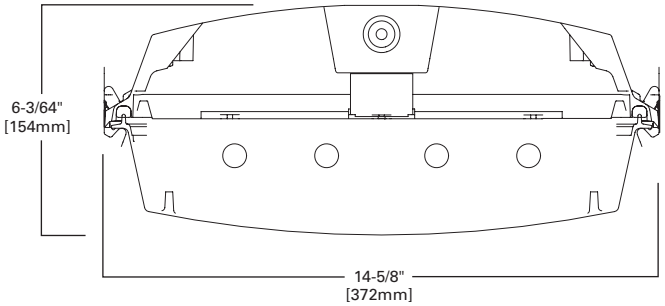



VT4
454
654

4' INDUSTRIAL
4 OR 6 T5 LAMPS

Vaportite Industrial

LAMP CONFIGURATIONS

4 LAMP

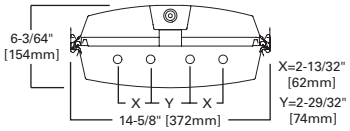

6 LAMP

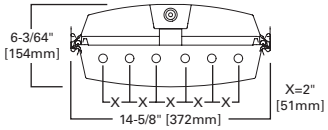

INSTALLATION DATA

SS Latches and Mounting Bail

MOUNTING BAILS
Furnished (Standard)
Stainless steel, Two per 4' Unit



MOUNTING DATA

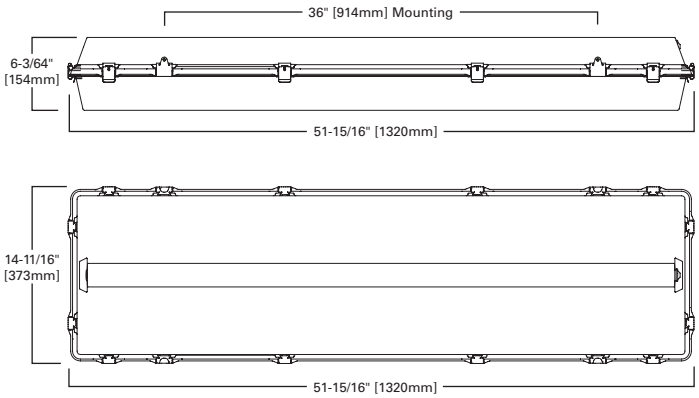

ENERGY DATA

Input Watts:
EB Ballast & STD Lamps
454=229
654=330

Luminaire Efficacy Rating
LER = FI-68
Catalog Number: VT4-654T5
Yearly Cost of 1000 lumens, 3000 hrs at .08 KWH = $3.53

*Reference the lamp/ballast data in the Technical Section for specific lamp/ballast requirements.

LAMPS CONTAIN MERCURY. DISPOSE ACCORDING TO LOCAL, STATE OR FEDERAL LAWS

LINEAR DISCONNECT
Safe and convenient means of disconnecting power.

COOPER Lighting Solutions

ADF082049
2014-09-23 14:20:30

PHOTOMETRICS

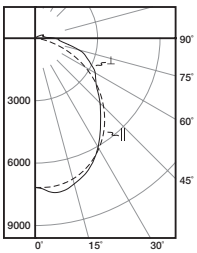

VT4-654T5-M-DR-UNV-EHT2-WL-U

(2) Electronic Ballasts

(6) 54W T5HO lamps 4400 lumens

Spacing criterion: (II) 1.3 x mounting height, (⊥) 1.2 x mounting height

Efficiency 84.7%

Test Report: VT4654T5M.IES

LER =68

Yearly Cost of 1000 lumens, 3000 hrs at .08 KWH = $3.53

Candela

Angle	Along II	45°	Across ⊠
0	7268	7268	7268
5	7283	7429	7494
10	7231	7556	7570
15	7098	7435	7348
20	6877	7136	7067
25	6577	6788	6656
30	6207	6377	6142
35	5775	5827	5529
40	5273	5202	4972
45	4723	4516	4478
50	4130	3910	3976
55	3501	3369	3617
60	2845	2812	3386
65	2176	2406	3012
70	1522	2080	2651
75	929	1615	2241
80	469	1193	1596
85	204	826	1182
90	106	721	1068

Coefficients of Utilization

	Effective floor cavity reflectance																			
rc	80%				70%				50%			30%			10%			0%		
rw	70	50	30	10	70	50	30	10	50	30	10	50	30	10	50	30	10	0		
RCR																				
0	100	100	100	100	97	97	97	97	92	92	92	87	87	87	82	82	82	80		
1	90	86	82	79	88	84	80	77	79	76	74	75	73	71	71	70	68	66		
2	82	75	69	64	79	73	67	63	69	65	61	66	62	59	63	59	57	55		
3	75	66	59	53	72	64	58	52	61	55	51	58	53	49	55	51	48	46		
4	69	58	51	45	66	57	50	44	54	48	43	52	47	42	49	45	41	39		
5	63	52	44	39	61	51	44	38	49	42	38	46	41	37	44	40	36	34		
6	58	47	39	34	56	46	39	34	44	38	33	42	37	32	40	36	32	30		
7	54	43	35	30	52	42	35	30	40	34	29	38	33	29	37	32	28	26		
8	50	39	32	27	49	38	31	27	37	31	26	35	30	26	34	29	25	24		
9	47	36	29	24	46	35	28	24	34	28	24	33	27	23	31	27	23	21		
10	44	33	26	22	43	32	26	22	31	25	21	30	25	21	29	24	21	19		

Zonal Lumen Summary

Zone	Lumens	%Lamp	%Fixture
0-30	5896	22.3	26.4
0-40	9507	36.0	42.5
0-60	16197	61.4	72.4
0-90	21214	80.4	94.9
0-180	22363	84.7	100.0

Luminance Data

Angle in Deg	Average 0-Deg cd/sm	Average 45-Deg cd/sm	Average 90-Deg cd/sm
45	8711	8122	7858
55	7753	7205	7478
65	6267	6592	7869
75	3999	6427	8294
85	1848	6358	7909

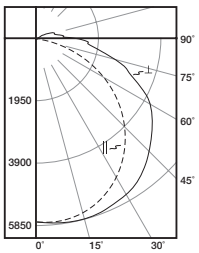

VT4-654T5-W-DR-UNV-EHT2-WL-U

(2) Electronic Ballasts

(6) 54W T5 lamps 4400 lumens

Spacing criterion: (II) 1.2 x mounting height, (⊥) 1.5 x mounting height

Efficiency 84.7%

Test Report: VT4654T5W.IES

LER =68

Yearly Cost of 1000 lumens, 3000 hrs at .08 KWH = $3.53

Candela

Angle	Along II	45°	Across ⊠
0	5747	5747	5747
5	5767	5793	5800
10	5732	5804	5836
15	5638	5763	5841
20	5483	5674	5801
25	5266	5544	5715
30	4997	5364	5627
35	4676	5136	5484
40	4308	4884	5258
45	3897	4576	4988
50	3452	4235	4702
55	2973	3817	4432
60	2461	3372	4118
65	1923	2967	3632
70	1378	2543	3093
75	867	1950	2619
80	459	1466	2020
85	212	1114	1614
90	119	1006	1486

Coefficients of Utilization

	Effective floor cavity reflectance																			
rc	80%				70%				50%			30%			10%			0%		
rw	70	50	30	10	70	50	30	10	50	30	10	50	30	10	50	30	10	0		
RCR																				
0	99	99	99	99	96	96	96	96	91	91	91	86	86	86	81	81	81	79		
1	89	84	80	76	86	82	78	75	77	74	71	73	70	68	69	67	65	63		
2	80	73	66	61	77	70	65	60	66	61	57	63	59	55	59	56	53	51		
3	73	63	56	50	70	61	54	49	58	52	47	55	50	46	52	48	44	42		
4	66	56	48	42	64	54	47	41	51	45	40	48	43	38	46	41	37	35		
5	61	49	41	35	59	48	40	35	45	39	34	43	37	33	41	36	32	30		
6	56	44	36	31	54	43	36	30	41	34	29	39	33	29	37	32	28	26		
7	52	40	32	27	50	39	32	26	37	31	26	35	30	25	34	29	25	23		
8	48	36	29	24	46	35	28	23	34	27	23	32	27	22	31	26	22	20		
9	45	33	26	21	43	32	26	21	31	25	21	30	24	20	28	23	20	18		
10	42	31	24	19	41	30	23	19	29	23	19	27	22	18	26	21	18	16		

Zonal Lumen Summary

Zone	Lumens	%Lamp	%Fixture
0-30	4729	17.9	21.1
0-40	7935	30.1	35.5
0-60	14805	56.1	66.2
0-90	20797	78.8	93.0
0-180	22369	84.7	100.0

Luminance Data

Angle in Deg	Average 0-Deg cd/sm	Average 45-Deg cd/sm	Average 90-Deg cd/sm
45	6900	7890	8380
55	6327	7830	8773
65	5331	7803	9086
75	3604	7460	9280
85	1873	8275	10340

ORDERING INFORMATION

SAMPLE NUMBER: VT4-454T5-M-DR-UNV-EHT1-WL-U

Series
VT4=Vaportite 4/6 Lamp

Number of Lamps
4=4 Lamps (Not Included)
6=6 Lamps (Not Included)

Wattage (Length)
49T5=49W T5HO Lamps (48")
51T5=51W T5HO Lamps (48")
54T5=54W T5HO Lamps (48")

Distribution
M=Medium Beam
W=Wide Beam (White)

Lens
DR=Clear Acrylic High Impact (Standard)
PC=Polycarbonate, Clear

Voltage [1]
120V=120 Volt
277V=277 Volt
347V=347 Volt
UNV=Universal Voltage 120/277 [2]
UNC=Universal [2] Voltage 347/480

GL=Single Element Fuse
GM=Double Element Fuse
VT-REM-__(specify battery)= Remote Emergency Enclosure [5]

Ballast Type [3]
EHT__=T5 Linear Electronic Start High Ambient.
Total Harmonic Distortion < 10%
No. of Ballast
1, 2 or 3

WL=Wet Label

Options
Blank=(2) End Watertite Hubs (all Watertite Hubs have 1/2" Conduit Entry)
C3=3' Power Cord
C6=6' Power Cord
PC3-=3' Power Cord & Plug (Specify Voltage) [4]
PC6-=6' Power Cord & Plug (Specify Voltage) [4]
VRS-=Vandal Resistant Screws for Latches
MS=Damp Listed Motion Sensor [4]
MSO/WL=Wet Listed Motion Sensor 360° [4]

Packaging
U=Unit Pack

Accessories (order separately)
Y-TOGGLE=Y Mounting Toggle, #2 Cable (Specify 10' or 30')
VT4-SS-SM=(2) Stainless Steel Surface Mounting Bracket

NOTES: [1] Products also available in non-US voltages and frequencies for international markets. [2] Not available when specifying emergencies, voltage must be specific. [3] For 654T5 configuration, EHT3 is recommended. [4] Voltage must be specified when ordered with plugs, motion or emergency ballasts. . [5] Rated for operations up to 30°C.

Specifications & dimensions subject to change without notice. Consult your Cooper Lighting Solutions Representative for availability and ordering information.

SHIPPING DATA

Catalog No.	Wt.
VT4-454T5-WL	20.8 lbs.
VT4-654T5-WL	26 lbs.

COOPER Lighting Solutions

Cooper Lighting Solutions
1121 Highway 74 South
Peachtree City, GA 30269
P: 770-486-4800
www.cooperlighting.com

Specifications and dimensions subject to change without notice.