Sure-Lites

DESCRIPTION

The Sure-Lites Architectural emergency series (SELA) is a UL924 code compliant solution with a superior aesthetic that eliminates the traditional "bug eye" emergency look. The system features a customizable shroud that can be field painted or covered with wall treatment to allow the fixture to blend into the space. An LED source, nickel cadmium battery and self-diagnostics create 29 feet of emergency egress coverage, eliminate maintenance and reduce the labor required to perform NFPA required monthly testing. The LED heads are adjustable with a patented forward throw optic.

Catalog #		**Type**
Project		
Comments		**Date**
Prepared by		

SPECIFICATION FEATURES

ELECTRICAL

- Dual Voltage Input 120/277 VAC, 60Hz
- External Battery Disconnect
- Brownout circuit detection
- Low-voltage disconnect
- Overload / Short Circuit protection
- 4.8V Battery back-up
- Self-diagnostic with Laser test capability

HOUSING CONSTRUCTION

- Injection molded, color stable, high impact polycarbonate
- White or black textured finish
- Suitable for recessed wall mount applications
- Halo hangar bars for recessed mounting
- J-box included

BATTERY

- Sealed Nickel Cadmium
- Full Recharge Time, 24 hours (max.)
- 0°C to 40°C (32°F to 104°F)

WARRANTY

- Five-year warranty
- Prorated seven-year battery warranty

CODE COMPLIANCE

- UL924 Listed
- Damp Location
- Life Safety NFPA 101
- NEC/OSHA
- Most State & Local Codes
- California Energy Code

Feature	Benefit
Custom cover	Superior aesthetic by eliminating unsightly "bug eye"
Base unit recesses into the wall	Minimal presence; only the shroud is visible
Field paintable polycarbonate housing	Shroud can be customized to blend into the space
LED source with nickel cadmium battery	No maintenance required
Self-diagnostics	Eliminate labor to perform required NFPA testing
Adjustable optic with forward throw	Maximum design flexibility

EMERGENCY LIGHT COVERS



ARC



BARREL



EDGE

DIMENSIONS

EMERGENCY LIGHT

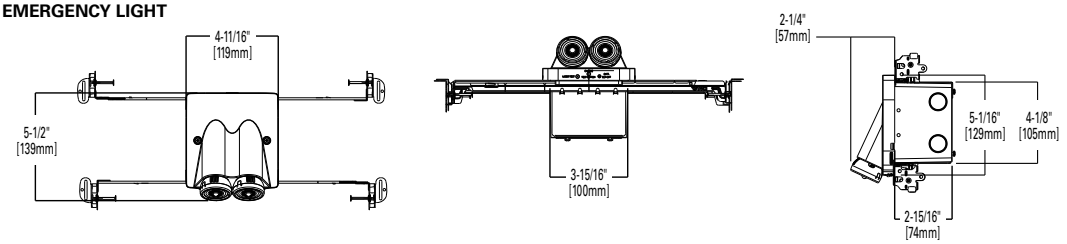

EMERGENCY LIGHT COVERS

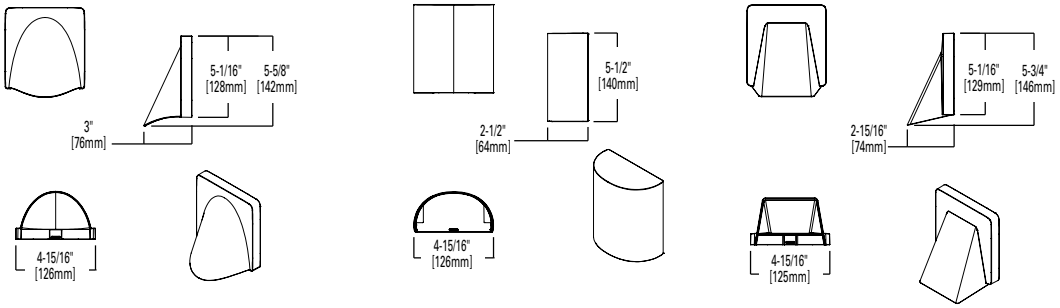



SELA Emergency Light

LED Emergency Light

Custom aesthetic covers

Adjustable Optic

Self-Diagnostics

SEL

EZ key external battery disconnect

UL LISTED

NFPA

T20 Certified to California Title 20 Appliance Database

0°to 40°C operating temperature range

ENERGY DATA

Voltage	Power	Current	PF
120V	0.6W	0.07 A	0.07
277V	0.7W	0.07 A	0.03

CATALOG LOGIC

SAMPLE NUMBER: SELA29SD, SELA29BKSD

Series	Egress Coverage	Color	Self-Diagnostic	Catalog
SELA	**29** = 29 feet of coverage	__ = white **BK** = black	**SD** = Self-Diagnostic (standard)	**SELA29SD** **SELA29BKSD**

Custom Cover - Ordered Separately

Series	Cover	Style	Color	Catalog	Geometry
SELA	**C**	**1**	__ = White	**SELAC1**	**Arc**
SELA	**C**	**2**	__ = White	**SELAC2**	**Barrel**
SELA	**C**	**3**	__ = White	**SELAC3**	**Edge**
SELA	**C**	**1**	**BK** = Black	**SELAC1BK**	**Arc**
SELA	**C**	**2**	**BK** = Black	**SELAC2BK**	**Barrel**
SELA	**C**	**3**	**BK** = Black	**SELAC3BK**	**Edge**

PHOTOMETRY

SELA29 ALL MODELS

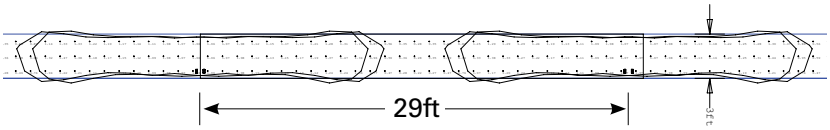

X	Y	Z	Orient	Tilt	Roll
-0.25	0.5	7.5	90	7	1
0.25	0.5	7.5	90	7	-1
28.75	0.5	7.5	90	7	1
29.25	0.5	7.5	90	7	-1
57.75	0.5	7.5	90	7	1
58.25	0.5	7.5	90	7	-1
-29.25	0.5	7.5	90	7	1
-28.75	0.5	7.5	90	7	-1

TECHNICAL DATA

Mechanical Housing
All components are injection molded with a color stable, high impact thermoplastic resin. The surface is textured to improve aesthetic appearance. Housings and covers are available in white or black. All surfaces are field paintable and can accept wall treatment.

EZ Key – External Power Disconnect
Prevents the battery from cycling during the construction phase and ensures battery is not drained from power cycling.

Self-Diagnostics
The self-diagnostic software will automatically perform all tests required by UL924, and NFPA101 will systematically calibrate itself in the field; thus reducing installation labor and eliminating manual calibration errors. The system indicates the status of the emergency light at all times using the LED indicator. A 90 minute battery power (emergency mode) simulation test will occur once every 12 months. A 30 second battery power simulation test will occur every 30 days.
The Solid-State microprocessor based system has the ability to accurately detect and warn of system failures, plus it incorporates all of the standard electronic features that sets Sure-Lites apart from its competition.

Low-Voltage Disconnect
The low-voltage circuitry disconnects the lighting load to protect the battery after run times in excess of the 90-minute UL limit. The disconnect remains in effect until normal utility power is restored preventing deep battery discharge.

Brownout Circuit Detection
The brownout circuit detection on the SELA emergency light monitors the flow of AC current to the unit and activates the emergency light heads when a predetermined reduction of AC power occurs.

Warranty
SELA units are backed by a five-year warranty on the fixtures and seven-year prorated warranty on the battery.



EZ Key


Laser tester

Part Number = LASER
(sold separately)

SELF-DIAGNOSTIC TESTING OPERATIONS

The Sure-Lites Self-diagnostics is continuously monitoring your emergency fixture, and will signal any failure through the 3 color indicator LED.

Initial Operation:
When the unit is first powered up it will go into a 24 hour fast charge and the indicator LED will pulse green. Once the unit has fully charged it will perform a self-calibration. After self-calibration, the LED will change to steady green indicating the unit is fully charged and float charging the battery to maintain readiness.

Automatic Testing:
The unit will perform a battery capacity, lamp/LED, and charge circuit test every 30 days for 30 seconds. During this time, the indicator LED will change to a steady yellow. It will perform a full battery capacity (90 minute) test once per year. During this time, the indicator LED will change to a blinking yellow.

Manual Testing:
- 10 Second "Installation" test – Press and release the test button once during fast charge (blinking green) to initiate a 10 second quick test. The sign will switch to emergency mode for 10 seconds allowing the installer to verify proper installation of the unit, and the LED indicator will turn solid yellow.
- 30 Second Test - Press and release the test button once during float charge (steady green). The indicator LED will turn steady yellow to indicate the unit is performing a 30 second test of the batteries and lamps/LEDs.
- 90 Minute Test - Press and release the test button a second time during a 30 second test (steady yellow) to change to a 90 minute test. During this test, the LED indicator will change to blinking yellow, and the circuit will perform a full battery capacity, charge circuit, and LED test.
- Canceling Test – Press and release the test button during the 90 minute test (flashing yellow) to return the fixture to its original state (fast charge or float charge)

Laser Test:
The SEL SD products are equipped with a Laser Test function that allows the unit to be manually tested without the need to physically press the test button. Shining a laser pointer in the hole marked "LASER TEST" on the bottom of the unit has the same effect as a press and release of the test button.

Clearing Failure Codes:
- A battery failure (LED two blink red) can be cleared by replacing the battery. Disconnecting the battery and AC power, or performing a full 90 minute discharge will reset the error code, however, it will return if the battery is faulty
- Charge Circuit (LED three blink red) and lamp/LED failure (LED four blink red) will clear when the unit successfully passes a manual or automatic 30 second test.

Indicators:
- LED Off - No power to unit, emergency mode.
- LED Steady Green - Unit is fully charged and is float charging the battery to maintain readiness.
- LED Green Pulse - Unit is in a 24 hour fast charge of the battery.
- LED Two Blink Red - Battery has failed a capacity test, or the battery is disconnected. See "Clearing Failure Codes" above.
- LED Three Blink Red - Battery charge circuit has failed. See "Clearing Failure Codes" above.
- LED Four Blink Red - Lamps have burned out, or on an EXIT/Combo, 50% or more of the LEDs have failed. See "Clearing Failure Codes" above.
- LED Steady Yellow - 30 second test or 10 second quick test (Fast Charge only).
- LED Blinking Yellow - 90 minute test.

Maintenance:
None required. Replace the batteries as needed according to ambient conditions. However, we recommend that the equipment be tested regularly in accordance with local codes.

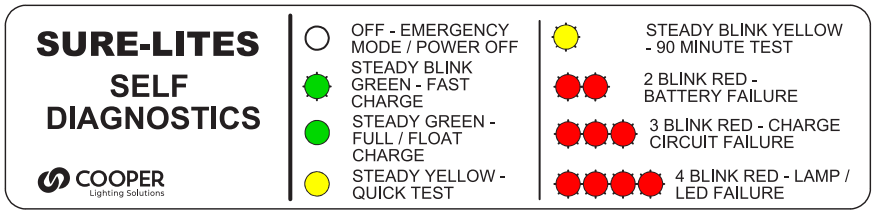

COOPER Lighting Solutions

Cooper Lighting Solutions
1121 Highway 74 South
Peachtree City, GA 30269
P: 770-486-4800
www.cooperlighting.com

Specifications and dimensions subject to change without notice.