DESCRIPTION

The RF LED Surface Heads Series provides remote heads (no battery) manufactured in high impact, mar-resistant engineering grade thermoplastic. A highly polished reflector located behind the lamp provides abundant emergency light to the floor when connected to an emergency battery source. Several finishes and lamp styles are available.

Catalog #		**Type**
Project		
Comments		**Date**
Prepared by		

SPECIFICATION FEATURES

Electrical
LED Remote Heads

Lampholder/Mounting Plate Construction
- Choose single, or double
- Adjustable 359° swivel
- White finish standard
- Mounts to standard 4" round junction box

Lamp Data
- High lumen output equal to 9W incandescent





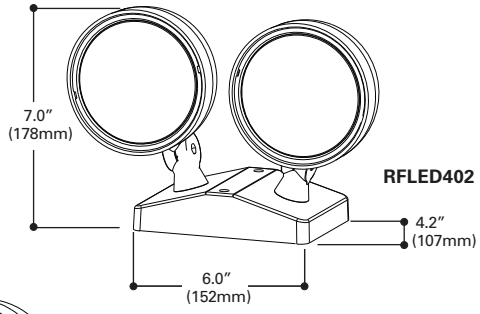

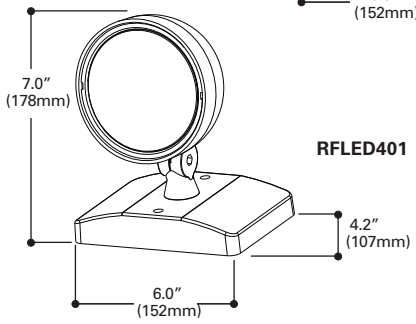

RIVAL LED
REMOTE HEADS

SURFACE MOUNT HEAD
LESS BATTERY
THERMO PLASTIC
LED LAMPS

EMERGENCY LIGHTING

ORDERING INFORMATION

Catalog No. Prefix	No. of Heads	Ship Wt.
RFLED401	1	2
RFLED402	2	4