Project		Catalog #		Type	
Prepared by		Notes		Date	

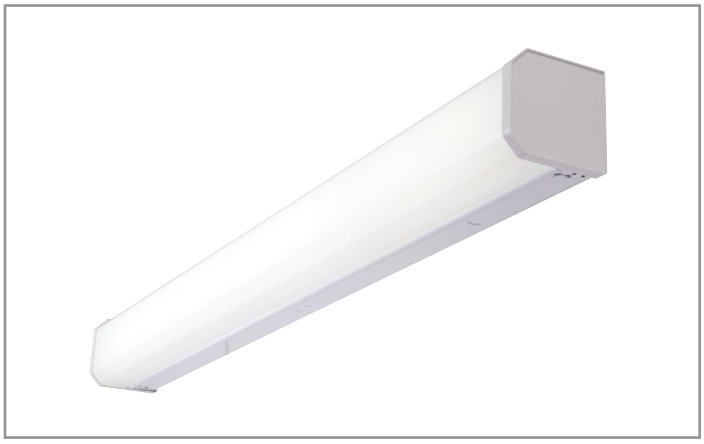

Metalux

BCLED

Wall Bracket LED

Typical Applications
General purpose lighting

Interactive Menu

- Order Information page 2
- Photometric Data page 3
- Product Warranty

Product Certification

Product Features

LINEAR DISCONNECT
Safe and convenient means of disconnecting power

powered by fifthlight

MWS MODULAR WIRING SYSTEM CLICK HERE

Top Product Features

- Twelve unique lumen packages
- Full frost lens for ideal LED aesthetics
- Three correlated color temperatures (3500K, 4000K and 5000K)
- Typical 85 plus CRI
- Class 2, 24V DC constant driver with standard 0-10V dimming

Dimensional and Mounting Details

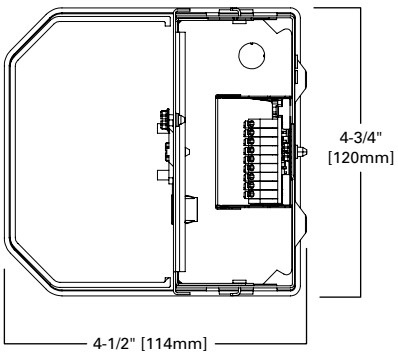

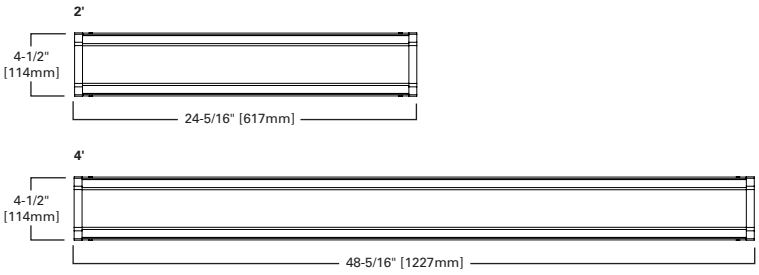

Order Information

SAMPLE ORDER NUMBER: **4BCLED-LD4-40SL-F-UNV-L835-CD1-U**

Rating	Width	Series	Lamp Type	Lumen Output	Shielding	Voltage	Options
[Blank]=Standard	**2**=2 ft. Width **4**=4 ft. Width	**BCLED**=LED Wall Bracket	**LD4**=LED 4.0	**8SL**=900 (5) **16SL**=1600 (5) **20SL**=2000 **24HL**=2400 (5) **28HL**=2800 (5) **28SL**=2800 (7) **32SL**=3200 **36SL**=3600 **40SL**=4000 **44HL**=4400 **48HL**=4800	**F**=Frost Acrylic (standard)	**347V**=347 Volt **480V**=480 Volt **UNV**=Universal Voltage 120-277 (2) **UNC**=Universal Voltage 347/480 (7)	**GL**=Single Element Fuse **DL**=Double Element Fuse
				Notes (3) Nominal lumen output. (5) 2 ft. model. (7) Only available in 4 ft. models.		**Notes** (1) Products also available in non-US voltages and frequencies for international market. (2) Not available when specifying emergencies, voltage must be specific. (7) Only available in 4 ft. models.	

Emergency	CCT	Driver Type	Number of Drivers	Options	Packaging
EL7W=7-watt, 120V-277V emergency battery pack installed (4), (6) **EL14W**=14-watt 120V-277V emergency battery pack installed (4), (6) **GTR2**=Bodine Generator Transfer Relay (9) **ETRD**=Iota Emergency Transfer Relay with dimming control (9)	**L830**=3000K **L835**=3500K **L840**=4000K	**CD**=0-10V Dimming Driver **SD**=Step-dim (Bi Level) (7), (8) **5LTD**=Fifth Light (DALI) Driver (7), (8)	**1**=1 Driver	**CO**=Convenience Outlet (120V only) **PS1**=Pull Switch (1 Circuit)	**U**=Unit Pack
Notes (4) With integral test switch/indicator/laser test. For approximate delivered lumens multiply the lumens per watt of the desired fixture by the wattage of the emergency battery pack (100 lm/W x 7=700 lumens). IES-format photometry for luminaire under emergency operation available. (6) No integral emergency for 2 ft. models. (9) Used to bypass local control during outage. Must be used in conjunction with UL 1008 device (provided by others). GTR2 option includes 2 relays on fixtures with dimming drivers. ETRD option only requires one relay when used on a dimming fixture. Must specify voltage as 120V or 277V when ordering these devices.		**Notes** (7) Only available in 4 ft. models. (8) Step dim and DALI only available in 3600, 4000, 4400 and 4800 lumen packages.			

Accessories

Accessories
AYC-Chain/Set=36" Chain Hanger (Use 1 Set Per Fixture) **SCF**=Fixed Stem Set (Specify Length) **SCS**=Swivel Stem Set (Specify Length) **SCA**=Adjustable 48" Stem Set **A1B/Spacer-U**=Spacer 1-1/2" to 2-1/2" from ceiling (Use 2 per fixture)

Product Specifications

Construction
- Housing consists of die formed cold rolled steel with decorative white opaque injection molded end plates
- Reflector/channel wireway cover secured by fasteners for easy wireway access
- Channel back has numerous KO's for easy installation

Controls
- Equipped standard with a 0-10V continuous dimming driver that works with any standard 0-10V control/dimmer
- Dimming range is 10% to 100%; varies by control device
- Combine with energy saving products like occupancy sensors, day lighting controls, and lighting relay panels to maximize energy savings

Electrical
- Long-Life LED system coupled with electrical driver to deliver optimal performance
- LED's available in 3000K, 3500K or 4000K with a typical CRI 85
- Projected life is 60,000 hours at 70% lumen output. Electronic drivers are available for 120-277V applications.
- A 0-10V dimming driver is standard

Emergency Battery Pack Option
- Optional 120V-277V integral emergency battery pack is available in 7-watts or 14-watts to meet critical life-safety lighting requirements
- The 90-minute batteries provide constant power to the LED system, ensuring code-compliance
- A test switch/indicator button can be tested safely from the ground using a laser pointer, while the patented EZ Key prevents accidental discharge of the battery during construction
- Emergency/generator transfer options available – see ordering information for details

Finish
- Highly reflective post painted finish (PAF) standard offering customers the optimal finish and handling
- Additionally, each housing is treated with multistage iron phosphate pretreatment, ensureing maximum bonding and rust inhibitor

Shielding
- Specially developed LED lens blend allows this product series to offer optimal light out and providing smooth even illumination with no pixilation
- Lenses are designed from smooth opal white acrylic and provide 180° uniform light distribution (Uplight, Frontal & Downlight)
- Lens is securely held in place by removable decorative injection molded white end plates that can be easily removed for installation and maintenance

Installation
- Fixture may be surface (wall or ceiling) and suspended mounted
- See accessories below for ordering information

Compliance
- Modules are UL recognized components and indoor luminaires are cULus listed for up to 40°C ambient environments, RoHS compliant, and LED modules comply with IESNA LM-79 and LM-80 standards.
- Suitable for use in clothes closets when installed in accordance with the NEC 410.16 spacing requirements

Photometric Data

View IES files

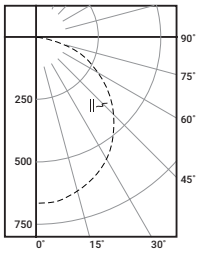

4BCLED-LD4-32SL-F-UNV-L835-CD1-U
Electronic Driver
Linear LED 3500K
Spacing criterion:
(II) 1.3 x mounting height, (⊥) 1.4 x mounting height
Lumens: 3171
Input Watts: 32.5W
Efficacy: 97.6 lm/W
Test Report:
4BCLED-LD4-32SL-F-UNV-L835-CD1-U.IES

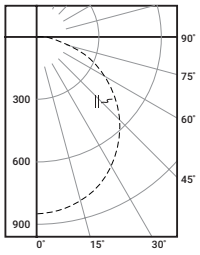

4BCLED-LD4-40SL-F-UNV-L835-CD1-U
Electronic Driver
Linear LED 3500K
Spacing criterion:
(II) 1.3 x mounting height, (⊥) 1.4 x mounting height
Lumens: 3990
Input Watts: 42.5W
Efficacy: 93.9 lm/W
Test Report:
4BCLED-LD4-40SL-F-UNV-L835-CD1-U.IES

Wattage

Length	Lumens Package	Watts
2 ft.	800	10W
2 ft.	1600	19W
2 ft.	2000	23W
2 ft.	2400	25W
2 ft.	2800	29W
4 ft.	2000	22W
4 ft.	2800	29W
4 ft.	3200	32W
4 ft.	3600	37W
4 ft.	4000	42W
4 ft.	4400	47W
4 ft.	4800	51W

Cooper Lighting Solutions
1121 Highway 74 South
Peachtree City, GA 30269
P: 770-486-4800
www.cooperlighting.com

© 2020 Cooper Lighting Solutions
All Rights Reserved.

Specifications and dimensions subject to change without notice.