Project		Catalog #		Type	
Prepared by		Notes		Date	

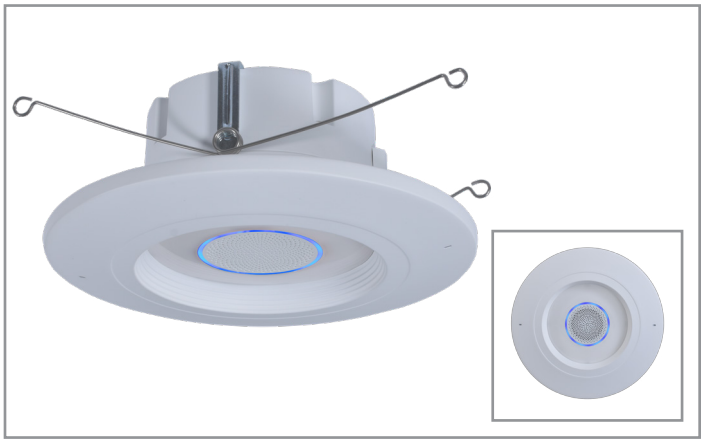

HALO HOME

RL56-HVA | VOICE

5/6-Inch Alexa Voice Integrated LED Retrofit Module

Typical Applications
Residential

Interactive Menu

- Order Information page 2
- Product Specifications page 3
- Energy & Performance Data page3
- Product Warranty

Product Certification

-CA models only

Product Features

Top Product Features

- Amazon Alexa Voice integration
- Adjustable white tuning: 2700K - 5000K, 90 CRI
- Connect to the HALO Home Bluetooth Mesh network, no hub required
- Suitable for new construction, remodel and retrofit
- Certified for use with HALO 5” & 6” housings. Certified for use with other 5” & 6” housings

Dimensions

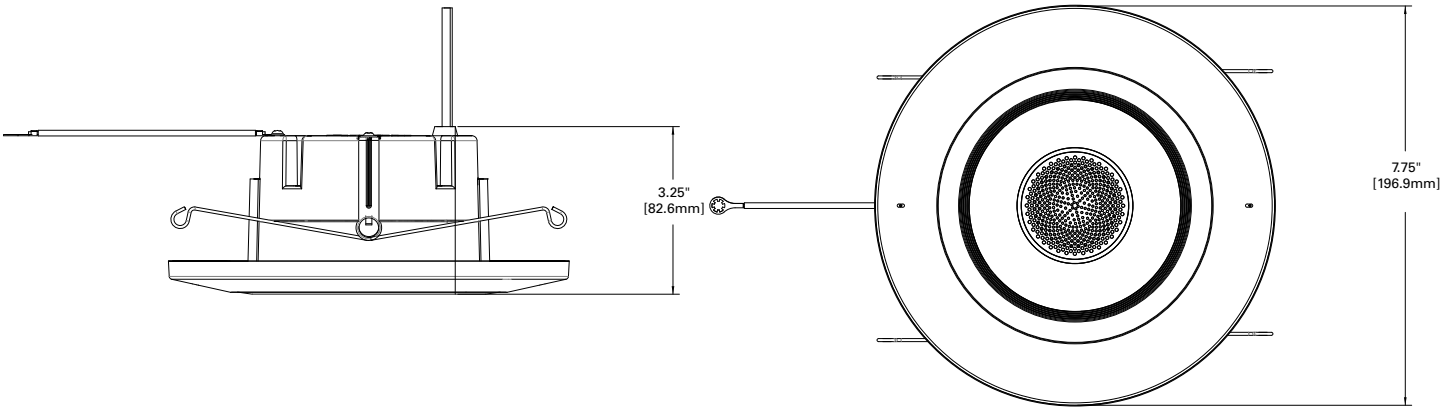

Kit Order Information

SAMPLE ORDER NUMBER: **RL56HVAHWB1**

Module	Kit Type

Module	Kit Type
RL56 = HALO Voice RL56 LED module	**HVAHWB1** = 5/6" Halo Voice + Bridge **HVAHIWAC** = 5/6" Halo Voice + Accessory + Bridge Kit

Order Information

SAMPLE ORDER NUMBER: **RL56069B4AWHVA**

Module	CRI/CCT	Protocol	Finish	Type	T24 Compliant

Module	CRI/CCT	Protocol	Finish	Type	T24 Compliant
RL5606 = HALO Voice RL56 LED module	**9** = 90 CRI minimum, white tuning, select CCT 2700K – 5000K, in the mobile app	**B4A** = Bluetooth Mesh wireless control, 4.0, and Amazon Alexa Voice Services module	**W** = matte white baffle	**HVA** = Halo Voice Alexa	**-CA** = T24 Compliant

Housing Compatibility

Compatible Halo Incandescent E26 Screwbase Housings	
Halo Standard Housings 5-inch **H5ICAT**= 5" Insulated Ceiling, Air-Tite New Construction Housing **H5RICAT**= 5" Insulated Ceiling, Air-Tite Remodel Housing **H5ICATNB**= 5" Insulated Ceiling, Air-Tite New Construction Housing, No Socket Bracket **H5T**= 5" Non-IC, New Construction Housing **H5RT**= 5" Non-IC, Remodel Housing **H25ICAT =** 5" Shallow, Insulated Ceiling, Air-Tite New Construction **H25ICATNB =** 5" Shallow, Insulated Ceiling, Air-Tite New Construction, No Socket Bracket **E5TAT**= 5" Non-IC, New Construction Housing **E5RTAT**= 5" Non-IC, Remodel Housing **H5TNB**= 5" Non-IC, New Construction Housing, No Socket Bracket **E5TATNB**= 5" Non-IC, New Construction Housing, No Socket Bracket **E5ICAT**= 5" Insulated Ceiling, Air-Tite New Construction Housing **E5RICAT**= 5" Insulated Ceiling, Air-Tite Remodel Housing **E5ICATNB**= 5" Insulated Ceiling, Air-Tite New Construction Housing, No Socket Bracket **Halo Standard Housings 6-inch** **H7ICAT**= 6" Insulated Ceiling, Air-Tite New Construction Housing **H7RICAT**= 6" Insulated Ceiling, Air-Tite Remodel Housing **H7ICT**= 6" Insulated Ceiling, New Construction Housing **H7RICT**= 6" Insulated Ceiling, Remodel Housing	**H7ICATNB**= 6" Insulated Ceiling, Air-Tite New Construction Housing, No Socket Bracket **H7ICTNB**= 6" Insulated Ceiling, New Construction Housing, No Socket Bracket **H7T**= 6" Non-IC, New Construction Housing **H7RT**= 6" Non-IC, Remodel Housing **H7TNB**= 6" Non-IC, New Construction Housing, No Socket Bracket **H7TCP**= 6" Non-IC, Chicago Plenum, New Construction/Remodel Housing **H7UICAT**= 6" Insulated Ceiling, Universal, Air-Tite, New Construction Housing **H27ICAT**= 6" Shallow, Insulated Ceiling, Air-Tite New Construction **H27RICAT**= 6" Shallow, Insulated Ceiling, Air-Tite Remodel Housing **H27T**= 6" Shallow, Non-IC, New Construction Housing **H27RT**= 6" Shallow, Non-IC, Remodel Housing **E27ICAT**= 6" Shallow, Insulated Ceiling, Air-Tite New Construction **E27RICAT**= 6" Shallow, Insulated Ceiling, Air-Tite Remodel Housing **E27TAT**= 6" Shallow, Non-IC, New Construction Housing **E27RTAT**= 6" Shallow, Non-IC, Remodel Housing **E7ICAT**= 6" Insulated Ceiling, Air-Tite New Construction Housing **E7RICAT**= 6" Insulated Ceiling, Air-Tite Remodel Housing **E7ICATNB**= 6" Insulated Ceiling, Air-Tite New Construction Housing, No Socket Bracket **E7TAT**= 6" Non-IC, New Construction Housing **E7RTAT**= 6" Non-IC, Remodel Housing **E7TATNB**= 6" Non-IC, New Construction Housing, No Socket Bracket

RL56 Series LED Retrofit is UL Classified for retrofit in the follow 5/6" recessed housings:
The RL56 Voice Series LED light module - trim combination is UL Certified for use with any 5"/6" diameter recessed housing constructed of steel or aluminum with an internal volume that exceeds 107.9 in3 in addition to those noted above.

Product Specifications

Wireless System

- For use with the Halo Voice and Halo Home mobile apps.
- Wi-Fi module connects product to wireless network through the Halo Voice app. Sign-In to Amazon Account within the Halo Voice app for Alexa functionality.
- Bluetooth low energy (BLE) mesh allows on/off, white tuning and lumen output to be controlled wirelessly with companion wall switches, smart phones and tablets using Halo Home mobile application.
- Group, schedule, scenes and automate lighting actions through Halo Home mobile app.
- Bridge required to control the light with voice.

  HALO Home products work better together. Smartphone will need to be within range to control a HALO Home device. Expand and strengthen the Bluetooth network range by adding more HALO Home devices. Visit www.cooperlighting.com to learn more.

Wireless Pairing

- See HALO Home Quick Start Guide for wireless setup, guidance and troubleshooting: www.cooperlighting.com

Module - Trim

- Module construction includes LED Array, heat sink, reflector, lens, baffle and trim ring.
- Regressed baffle
- Heat sink designed to conduct heat away from the LED Array, keeping the junction temperatures below specified maximums, even when installed in insulated ceiling environments.

LED Array

- Mid power LED array provides a uniform source with high efficiency and no pixilation.
- 90 CRI minimum, R9 greater than 50
- Color accuracy within 3 SDCM at the CCT endpoints and 4 SDCM in between endpoints, provide color accuracy and uniformity.
- Color Temperature (CCT) has an adjustable range from 2700K to 5000K within the mobile app (factory default 3000K)
- 50,000 hour life

Optical Assembly

- Regressed lens
- Impact-resistant polycarbonate
- Convex form and lamp-like appearance
- Diffuse for even illumination

Driver

- Integral 120V 50/60 Hz constant current driver provides noise free operation
- Inline electrical quick connect and E26 adapter (provided in non California version) provides mains connections
- Consult instruction sheets and quick start guide for more information

Dimming

- In the Halo Home mobile app, or through Alexa commands for continuous,flicker-free dimming from 100% to 5%.
- It is not recommended with any in wall dimmers.

Retention

- Integral torsion springs for quick and secure installation

Compliance

- UL Certified for US and Canada for use with Halo housings and other's housings
- EMI/RFI emissions per FCC 47CFR Part 15 consumer limits
- Contains no mercury or lead and RoHS compliant
- Photometric testing in accordance with IES LM-79-08
- Lumen maintenance projections in accordance with IES LM-80-08 and TM-21-11
- Can be used for State of California Title 24 high efficacy luminaire compliance. Complies with Title 24 JA8-2016-E.
- FCC ID - 2AKCY-RL56BLEHVA
- IC Code - 4706A-RL56BLEHVA

Warranty

- Five year limited warranty, consult website for details. www.cooperlighting.com

Energy and Performance Data

Standard Efficacy Versions

Catalog Number	Lumens	Watts	lm/W
RL56069B4AWHVA	827	12.5	66.2

Lighting Facts

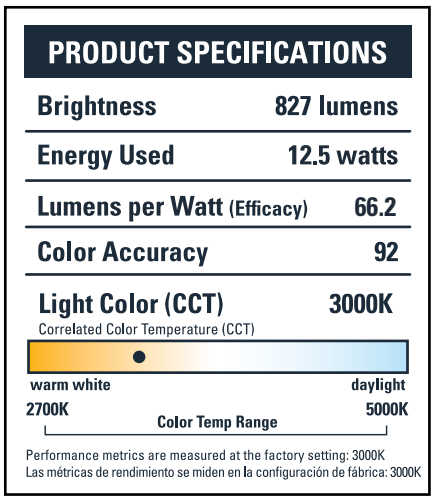

Cooper Lighting Solutions
1121 Highway 74 South
Peachtree City, GA 30269
P: 770-486-4800
www.cooperlighting.com

© 2020 Cooper Lighting Solutions
All Rights Reserved.

Specifications and dimensions subject to change without notice.