IB505071EN

Installation Instructions for SELMTG and ATLELMTG

⚠ WARNING

Risk of Fire/Electric Shock

If not qualified, consult an electrician.

⚠ WARNING

Risk of Electric Shock

Disconnect power at fuse or circuit breaker before installing or servicing.

IMPORTANT SAFEGUARDS

WHEN USING ELECTRICAL EQUIPMENT, BASIC SAFETY PRECAUTIONS SHOULD ALWAYS BE OBSERVED INCLUDING THE FOLLOWING.

1. **READ AND FOLLOW ALL SAFETY INSTRUCTIONS**
2. Do not use outdoors.
3. Do not use in hazardous locations, or near gas or electric heaters.
4. Do not let power supply cords touch hot surfaces.
5. Use caution when servicing batteries. Battery acid can cause burns to skin and eyes. If acid is spilled on skin or in eyes, flush acid with fresh water and contact a physician immediately.
6. Do not use this equipment for other than the intended use
7. Installation is to be performed only by qualified personnel.
8. Install in accordance with National Electric Code and local regulatory agency requirements.
9. The use of unauthorized accessory equipment not recommended by the manufacturer as it may cause an unsafe condition.
10. Equipment should be mounted in locations and at heights where it will not readily be subjected to tampering by unauthorized personnel.
11. **SAVE THESE INSTRUCTIONS**

MAX MOUNTING HEIGHT: 27 ft.

INSTRUCTIONS FOR INSTALLATION

1. De-energize all power circuits that will be connected to the emergency light.
2. Open the unit by removing the screws securing the side access panel. Lift the access panel up to remove it. (Figure 2)
3. If using the T-Grid clips, install them now. Remove the screws from the ends of the unit and install the clip between the housing and the screw. If securing the unit back to structure, it is recommended to use the T-Grid clip as a connection point. NOTE: Always install the unit in accordance with all applicable codes and regulations. (Figure 2)
4. Identify and remove all knock-outs on the housing that will be used.
5. Raise the unit above the T-Grid and lower it into position so that it is resting on the grid structure. If using the grid clips, light downwards force on the unit may be required to secure them.
6. Bring wires into the unit and connect the power supply and ground in accordance with local codes. Wire connections as follows: 277 VAC line to Orange lead or 120 VAC line to Black lead; Neutral to white lead. Ground to Green wire; Cap unused line lead. (See Figure 2)
7. External remote connections should be made as follows: Purple to Remote Positive (+), Yellow to Remote Negative (-).
8. Replace the access panel and re-secure it using the two screws.
9. Adjust the lamp heads to their desired orientation. The heads can pivot and rotate. Apply force to the small triangle on the head to pivot the lamp head. Grab the lamp head and twist to rotate. Avoid touching the lens for optimal light output. (Figure 1)
10. Turn on AC power and remove the EZ-Key. The unit lamps may briefly illuminate and the charge indicator light will illuminate. Allow 24 hours for the unit to charge.
11. If AC power to the unit is to be cycled on and off, re-insert the EZ-key until final commissioning where it may again be removed.

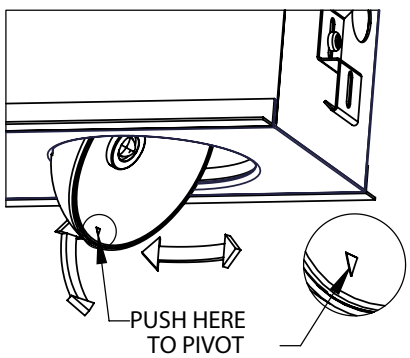

Figure 1: Head Adjustment

COOPER Lighting Solutions

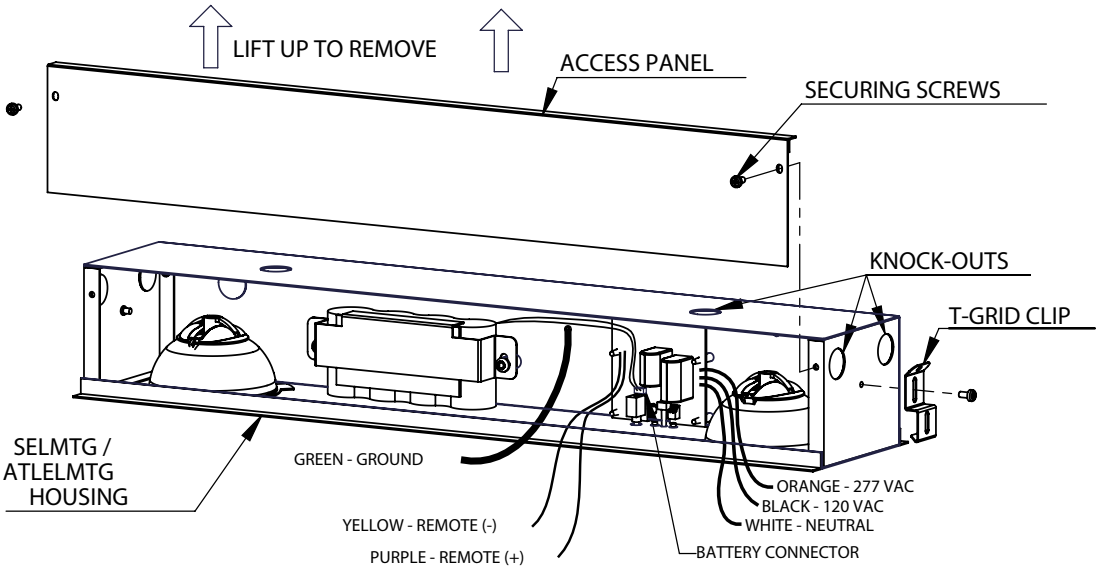

Figure 2

Maintenance

Replace the batteries as needed according to ambient conditions. However, we recommend that the equipment be tested regularly in accordance with local codes.

NOTE: Servicing of any parts should be performed by qualified personnel. Only use replacement parts supplied by Cooper Lighting Solutions.

CAUTION: This equipment is furnished with a sophisticated low voltage battery dropout circuit to protect the battery from over discharge after its useful output has been used. Allow 24 hours recharge time if connected to 120 or 277V, after installation or power failure for 90 minute testing.

Trouble Shooting Guide

If charge indicator LED does not illuminate, check the following:

- Check AC supply – verify that unit has 24 hour AC supply.

If Emergency Lights do not light in emergency mode but charge indicator LED is on before test:

- Unit is shorted or battery is not connected.
- Battery discharged. Permit unit to charge for 24 hours and then re-test.
- If following the above trouble shooting hints does not solve your problem, contact your local Cooper Lighting Solutions representative for assistance.

Instructions for Sure-Lites Eagle Eye Self Diagnostics

The Sure-Lites Eagle Eye Self Diagnostics is continuously monitoring your emergency fixture and will signal any failure through the 3 color indicator LED.

Initial Operation

When the unit is first powered up, it will go into a 24 hour fast charge, indicated by the indicator LED blinking green. Once the unit has fully charged, it will perform a self-calibration, after which the LED will change to steady green, indicating the unit is fully charged and is float charging the battery to maintain readiness.

Automatic Testing

The unit will perform a battery capacity, lamp/LED, and charge circuit test every 30 days for 30 seconds. During this time, the indicator LED will change to a steady yellow. It will perform a full battery capacity (90 minute) test once per year. During this time, the indicator LED will change to a blinking yellow.

Manual Testing

- 10 Second "Installation" test – Press and release the test button once during fast charge (blinking green). The light will switch to emergency mode for 10 seconds illuminating the emergency lights allowing the installer to verify proper installation of the unit. During testing the LED indicator will turn steady yellow.
- 30 Second Test - Press and release the test button once during float charge (steady green). The indicator LED will turn steady yellow to indicate the unit is performing a 30 second test of the batteries and lamps/LEDs.
- 90 Minute Test -Press and release the test button a second time during a 30 second test (steady yellow) to change to a 90 minute test. During testing the LED indicator will change to blinking yellow and the circuit will perform a full battery capacity, charge circuit and LED test for 90 minutes.
- Canceling Test – Press and release the test button during the 90 minute test (blinking yellow) to return the fixture to its original state (fast charge or float charge).

Clearing Failure Codes

- A battery failure (LED two blink red) can be cleared by replacing the battery. Disconnecting the battery and AC power or performing a full 90 minute discharge will reset the error code. However, the error code will return if the battery is faulty.
- Charge Circuit (LED three blink red) and lamp/LED failure (LED four blink red) will clear when the unit successfully passes a manual or automatic 30 second test.

Indicators

- LED Off - No power to unit or in emergency mode.
- LED Steady Green - Unit is fully charged and is float charging the battery to maintain readiness.
- LED Green Blink - Unit is in a 24 hour fast charge of the battery.
- LED Two Blink Red - Battery has failed a capacity test or the battery is disconnected. See "Clearing Failure Codes" above.
- LED Three Blink Red - Battery charge circuit has failed. See "Clearing Failure Codes" above.
- LED Four Blink Red - One or more of the lamps has failed. See "Clearing Failure Codes" above.
- LED Steady Yellow - 30 second test or 10 second quick test (Fast Charge only).
- LED Blinking Yellow - 90 minute test

CAUTION: This equipment is furnished with a sophisticated low voltage battery dropout circuit to protect the battery from over discharge after its useful output has been used. Allow 24 hours recharge time after installation or power failure for 90 minute testing.

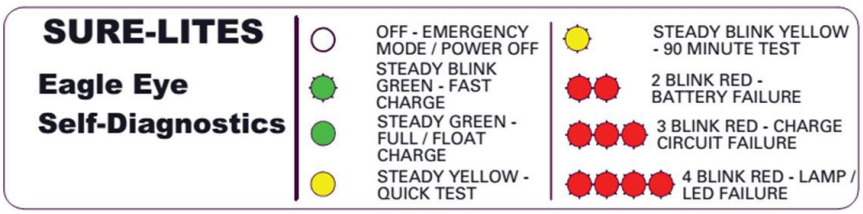

Warranties and Limitation of Liability

Please refer to **www.cooperlighting.com** for our terms and conditions.

COOPER Lighting Solutions

Cooper Lighting Solutions
1121 Highway 74 South
Peachtree City, GA 30269
P:770-486-4800
www.cooperlighting.com
049-315

© 2020 Cooper Lighting Solutions
All Rights Reserved
Printed in USA
Impreso en los EE. UU.
Publication No. IB505071EN
January 2, 2019 2:36 PM

Cooper Lighting Solutions is a registered trademark. All trademarks are property of their respective owners.

Cooper Lighting Solutions es una marca commercial registrada. Todas las marcas comerciales son propiedad de sus respectivos propietarios.